SKAGIT ENVIRONMENTAL BANK
HYDROLOGIC CONDITIONS RESTORATION

SUSTAINABLE ENVIRONMENTS, LLC

PHASE 1, 2, & 3

MOUNT VERNON, WASHINGTON

LOCATION MAP
SCALE: N.T.S.

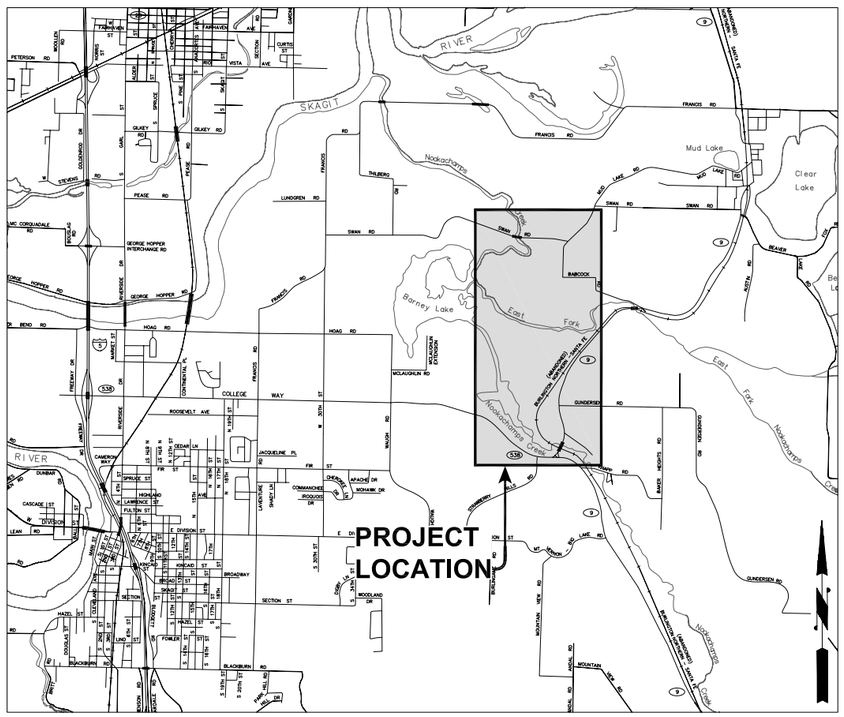

VICINITY MAP
SCALE: N.T.S.

SHEET INDEX		
SHT NO.	DWG NO.	SHEET TITLE
1	G-1	TITLE SHEET, INDEX, AND VICINITY MAP
2	G-2	PROJECT NOTES
3	G-3	CONSTRUCTION NOTES
4	G-4	CONSTRUCTION NOTES
5	C-1	EXISTING CONDITIONS AND PROPOSED STRUCTURES
6	C-2	PHASE 1 SITE PLAN AND PROPOSED WORK
7	C-3	PHASE 1 SITE PLAN AND PROPOSED WORK
8	C-4	PHASE 1 GRADING CROSS-SECTIONS
9	C-5	PHASE 1 GRADING CROSS-SECTIONS
10	C-6	ELJ 1 - GRADE CONTROL STRUCTURE PLAN
11	C-7	ELJ 1 - PROFILE AND DETAILS
12	C-8	ELJ 1 - LAYERING PLAN
13	C-9	ELJ 2 - GRADE CONTROL STRUCTURE PLAN
14	C-10	ELJ 2 - PROFILE AND DETAILS
15	C-11	ELJ 2 - LAYERING PLAN
16	C-12	ELJ 3 - GRADE CONTROL STRUCTURE PLAN
17	C-13	ELJ 3 - PROFILE AND DETAILS
18	C-14	ELJ 3 - LAYERING PLAN
19	C-15	PHASE 1 BANK STABILIZATION
20	C-16	PHASE 1 REED CANARYGRASS AND SEEDING PLAN
21	C-17	PHASE 2 PROPOSED GRADING PLAN
22	C-18	PHASE 2 STOCKPILE AREA
23	C-19	PHASE 2 PROPOSED PLANTING PLAN
24	C-20	BUFFER PLANTING PLAN
25	C-21	STREAM BANK RE-VEGETATION PLAN
26	C-22	WETLAND PLANTING DETAILS
27	C-23	PHASE 2 HABITAT STRUCTURES
28	C-24	PLANTING LIST
29	C-25	PHASE 2 GRADING PROFILES
30	C-26	PHASE 2 GRADING PROFILES
31	C-27	PHASE 2 GRADING PROFILES
32	C-28	PHASE 2 GRADING PROFILES
33	C-29	PHASE 3 PROPOSED PLANTING PLAN
34	C-30	CREDIT GENERATION PLAN
35	ESC-1	EROSION AND SEDIMENT CONTROL PLAN
36	ESC-2	EROSION AND SEDIMENT CONTROL DETAILS

SHEET INDEX		
SHT NO.	DWG NO.	SHEET TITLE
37	R-1	WELL LOCATIONS AND STAFF GAUGE LOCATIONS
38	R-2A	WELL DEPTH TO GROUNDWATER 2005
39	R-2B	WELL DEPTH TO GROUNDWATER 2006
40	R-2C	WELL DEPTH TO GROUNDWATER 2007
41	R-3	GROUNDWATER CONTOURS 2ND QUARTER
42	R-4	DIFFERENCE BETWEEN GROUND SURFACE AND GROUNDWATER ELEVATIONS (2ND QT. 2005/2006/2007)
43	R-5	UPDATED HEC-RAS CROSS SECTION LOCATIONS
44	R-6	WETLAND 1 DRAINAGE DIAGRAM
45	R-7	WETLAND 4 DRAINAGE DIAGRAM
46	R-8	PURCHASED, SOLD, AND INTENDED FUTURE USES OF THE SKAGIT ENVIRONMENTAL BANK AND SURROUNDING PROPERTIES

1 / C-3 — DETAIL REFERENCE NUMBER / DRAWING ON WHICH DETAIL IS SHOWN

DETAIL — 1 / C-1 — DETAIL REFERENCE NUMBER / DRAWING FROM WHICH DETAIL WAS TAKEN
SCALE: NTS

A / C-4 — SECTION REFERENCE LETTER / DRAWING ON WHICH SECTION IS SHOWN

SECTION — A / C-2 — SECTION REFERENCE LETTER / DRAWING FROM WHICH SECTION WAS TAKEN
SCALE: NTS

"-" INDICATES THAT THE DETAIL/SECTION IS SHOWN ON THE SAME SHEET

"TYP" INDICATES THAT THE DETAIL/SECTION IS UNIFORMLY TYPICAL THROUGHOUT PROJECT EXCEPT WHERE OTHERWISE NOTED

"VAR" SPECIFIES THAT DETAIL/SECTION WAS TAKEN FROM SEVERAL DRAWINGS

NOTE AND DETAIL/SECTION REFERENCING

© 2007 Herrera Environmental, Inc. All rights reserved.

ONE INCH
AT FULL SIZE, IF NOT ONE INCH SCALE ACCORDINGLY

No.	REVISION	BY	APP'D	DATE
6	REVISION NO. 6	MRM	MS	2/08
5	REVISION NO. 5	MRM	MS	12/07
4	REVISION NO. 4	MRM	MS	9/07
3	REVISION NO. 3	MRM	MS	8/07
2	REVISION NO. 2	MRM	MS	6/06
1	REVISION NO. 1	MRM	MS	5/06

HERRERA ENVIRONMENTAL CONSULTANTS
2200 Sixth Avenue
Suite 1100
Seattle, Washington
98121-1820
206-441-9080
206-441-9108 FAX
http://www.herreralnc.com

DESIGNED: M. MERKELBACH
DRAWN: L. TURNIDGE
DESIGNED: -
DRAWN: -
DESIGNED: -
CHECKED: -
SCALE: AS NOTED
APPROVED: M. SPILLANE

SKAGIT ENVIRONMENTAL BANK
PHASE 1, 2, & 3

TITLE SHEET, INDEX AND VICINITY MAP

DATE: FEBRUARY 2008
PROJECT NO: 04-02822-003
DRAWING NO: G-1
SHEET NO: 1 OF 46

Path: O:\proj\04-02822-003\Cad\Dwgs\Phase 1-2-3 Rev 6\G-1.dwg
Plot Date: 3/10/2008 11:28 AM Cad User: Laura Turnidge
Plot Style Table: Herrera.ctb Plotter: Adobe PDF

OVERALL PROJECT:

1. THE BANKING PROJECT IS PLANNED TO BE CONSTRUCTED IN THREE PHASES TO EFFECT HYDROLOGIC AND HYDRAULIC MODIFICATIONS AND REFINE DESIGN TO ACTUAL SITE RESPONSE CONDITIONS.
   PHASE 1 – ELJ CONSTRUCTION, DITCH FILL, AND COVER CROP PLANTING
   PHASE 2 – INITIAL SITE GRADING, HIGH-FLOW BACK CHANNEL CONSTRUCTION, PLANTING
   PHASE 3 – REMOVAL OF TEMPORARY ACCESS ROADS, FINAL GRADING, AND PLANTING
2. THE WORK IN EACH PHASE WILL INTRODUCE CHANGES AND BE PERFORMED IN A LOGICAL SEQUENCE TO MODIFY SPECIFIC FUNCTIONS OF THE ENTIRE SITE.
3. PHASE 1 IS PLANNED TO BE CONSTRUCTED DURING THE IDENTIFIED FISH WINDOW IN 2008.
4. PHASE 2 AND 3 WILL FOLLOW PHASE 1. AS HYDROLOGIC AND HYDRAULIC DATA ARE REVIEWED, THE GRADING PLAN WILL BE REFINED TO ENSURE PERFORMANCE STANDARDS ARE ACHIEVED.

PROJECT AREA:

1. THE PROJECT SITE IS 396 ACRES INCLUDING THE BANKING PROJECT BUFFER AREA. TOTAL INCLUDES WATER LINE AND POWER LINE EASEMENTS WHICH ARE 9.1 ACRES TOTAL.
2. THE BUFFER BOUNDARY IS SHOWN AS 150 FEET ALONG THE ENTIRE PROJECT SITE.
3. THE SITE IS ACCESSED FROM THE EAST BY STATE ROUTE 9.
4. THE SITE IS ACCESSED FROM THE WEST BY MCLAUGHLIN EXTENSION ROAD.
5. THE NOOKACHAMPS, EAST FORK NOOKACHAMPS, AND MUD CREEK ARE THE THREE STREAMS THAT PASS THROUGH THE SITE.

GROUND WATER WELLS:

1. GROUND WATER WELLS HAVE BEEN INSTALLED THROUGHOUT THE BANK SITE. SEE DRAWING R-1 FOR WELL LOCATIONS.
2. THIRTY-SEVEN (37) WELLS HAVE BEEN INSTALLED AND MONITORED MONTHLY BEGINNING 2005. THIS NUMBER ALSO INCLUDES SIX ADDITIONAL WELLS (35, 36, 37, 38, 39, AND 40) THAT WERE INSTALLED IN SUMMER 2006.
3. AVERAGED 2ND QUARTER (APRIL/MAY/JUNE) AND 3RD QUARTER (JULY/AUGUST/SEPTEMBER) DEPTH TO GROUNDWATER FROM EXISTING GRADE ELEVATION DATA FROM 2005, 2006, AND 2007 ARE SHOWN ON DRAWINGS R-2A, R-2B, AND R-2C.
4. DRAWING R-3 IS A 2ND QUARTER GROUND WATER ELEVATION CONTOUR MAP BASED ON AVERAGED 2005/2006/2007 2ND QUARTER DATA.
5. DRAWING R-4 IS A CONTOUR MAP SHOWING THE DIFFERENCE BETWEEN GROUND SURFACE AND GROUND WATER ELEVATIONS (AVERAGED 2005/2006/2007 2ND QUARTER).

REFERENCE WETLAND VEGETATION DATA:

1. WELLS HAVE BEEN INSTALLED IN REPRESENTATIVE VEGETATION COMMUNITIES (I.E. EMERGENT, SCRUB/SHRUB, AND FORESTED WETLAND) ONSITE.
2. WATER LEVEL DATA COLLECTED DURING THE SECOND QUARTER OF 2005/2006/2007 (APRIL/MAY/JUNE) FROM THE FOLLOWING WELLS WAS USED TO DELINEATE PROPOSED WETLAND COMMUNITIES:
   EMERGENT - 7 TO -2 IN (MW-2)
   SCRUB/SHRUB - 1 TO 8 IN TO GROUND WATER (MW-2, 3 AND 27)
   FORESTED - 9 TO 15 IN TO GROUND WATER (MW-3,5 AND 26)
   NOTE: A NEGATIVE NUMBER INDICATES STANDING WATER
3. PROPOSED WETLAND COMMUNITIES ARE BASED ON AVERAGE DEPTH TO GROUND WATER FROM EXISTING GROUND ELEVATION, VEGETATION HYDROLOGIC PREFERENCES, EXISTING TOPOGRAPHY, AND SUBSTRATE CONDITIONS.

PHASE 1 PROJECT WORK ELEMENTS:

1. IMPROVE FLOODPLAIN HYDROLOGIC AND HYDRAULIC CONDITIONS BY RESTORING IN-STREAM CHANNEL MORPHOLOGY, ALTERING THE GROUND WATER HYDROLOGY BY ADDING THREE ENGINEERED LOG JAM (ELJ) GRADE CONTROL STRUCTURES IN THE NOOKACHAMPS AND EAST FORK NOOKACHAMPS AT INTERVALS TO AFFECT CHANGE IN GEOMORPHIC PROCESS, AND BY FILLING IN EXISTING DRAINAGE DITCHES.
2. PLANT A COVER CROP OF HERBACEOUS PLANTS TO STABILIZE THE HYDRIC AND NON-HYDRIC SOILS. AREAS THAT WILL BE GRADED IN PHASE 2 WILL BE COVERED WITH A STERILE ITALIAN RYEGRASS (*LOLIUM PERENNE SSP. MULTIFLORUM*). PORTIONS OF THE SITE THAT WILL NOT BE GRADED IN PHASE 2 WILL BE PLANTED WITH A MIXTURE OF SEVEN NATIVE GRASSES. SEE LIST OF SPECIES IN PHASE 1 SEEDING AND PRE-SEEDING TREATMENT NOTES.

PHASE 1 SEEDING AND PRE-SEEDING TREATMENT NOTES:

GOAL:
1. PROVIDE A HERBACEOUS COVER CROP TO STABILIZE SOILS AND PREVENT INVASIVE SPECIES ENCROACHMENT.
2. LIMIT AND CONTROL THE SPREAD OF REED CANARYGRASS (*PHALARIS ARUNDINACEA*) AND HIMALAYAN BLACKBERRY (*RUBUS ARMENICUS*).
3. PREVENT ANY JAPANESE KNOTWEED (*POLYGONUM CUSPIDATUM*) FROM ESTABLISHING.

NOTES:
1. DISTURBED AND UNPLANTED AREAS THAT WILL NOT BE GRADED IN PHASE 1I WILL BE SEEDED WITH A NATIVE SEED MIX CONSISTING OF THE FOLLOWING:

Species (common name)	Scientific Name	Wetland Indicator Status	Application rate (pounds per acre)
TUFTED HAIRGRASS	*DESCHAMPSIA CESPITOSA*	FAC	2.84
MEADOW BARLEY	*HORDEUM BRACHYANTHERUM*	FACW	0.85
WESTERN MANNAGRASS	*GLYCERIA OCCIDENTALIS*	FACW	8.52
CALIFORNIA BROME	*BROMUS CARINATUS*	UPL	5.68
BLUE WILDRYE	*ELYMUS GLAUCUS*	UPL	5.11
WATER FOXTAIL	*ALOPECURUS GENICULATUS*	OBL	0.57
AMERICAN SLOUGHGRASS	*BECKMANNIA SYZIGACHNE*	OBL	1.42
TOTAL			25.00

2. PLANTING WILL BE PERFORMED IMMEDIATELY FOLLOWING HYDRAULIC AND HYDROLOGIC MODIFICATIONS (INSTALLATION OF ELJ'S AND DITCH FILLING)
3. PROPORTION OF TOTAL APPLICATION AMOUNTS WILL BE BASED ON RELATIVE AVAILABILITY OF SPECIES AS OF 2ND QUARTER 2008.
4. SEE SHEET C-16 FOR SEEDING LOCATIONS.

VEGETATION WETLAND INDICATOR STATUS ABBREVIATIONS:

FAC - FACULTATIVE
FACW - FACULTATIVE WETLAND
UPL - UPLAND
OBL - OBLIGATE WETLAND

REED CANARYGRASS MANAGEMENT:

1. AN INTEGRATED PEST MANAGEMENT (IPM) APPROACH COMPRISING MECHANICAL, CHEMICAL, AND COMPETITIVE PLANTING METHODS WILL BE EMPLOYED FOR CONTROLLING REED CANARYGRASS PATCHES R1, R2, R3, AND R4 (SEE C-16). GLYPHOSATE (RODEO®) WILL BE APPLIED DURING LATE SEPTEMBER TO ENSURE MAXIMUM EFFECTIVENESS (TRANSLOCATION TO RHIZOMES). DISKING WILL OCCUR IN THE FALL NO EARLIER THAN TWO WEEKS FOLLOWING HERBICIDE APPLICATION (TO ALLOW FULL ABSORPTION), BUT PRIOR TO SIGNIFICANT SOIL SATURATION OR INUNDATION. THERE WILL BE NO PLOWING WITHIN 20 FEET OF ANY STREAM BANK. MOWING WILL BE THE ONLY ALLOWED ACTIVITY. ANOTHER HERBICIDE APPLICATION WILL OCCUR IN EARLY SPRING FOLLOWING EMERGENCE OF NEW REED CANARYGRASS SHOOTS. RESTORATION PLANTINGS WILL BE INSTALLED AT HIGH DENSITY THROUGHOUT MOST INFESTED AREAS, ASSISTING WITH REED CANARYGRASS CONTROL BY CREATING SHADE AND COMPETITION FOR OTHER RESOURCES.
2. R2 ALONG COLLEGE WAY CREEK IS OUTSIDE OF THE BANK BOUNDARY. HOWEVER, IT IS A SOURCE OF FUTURE REED CANARYGRASS SEED AND PROPAGULE PRESSURE TO THE SOUTHWEST BANK AREA AND WILL THEREFORE BE TREATED.
3. FOLLOWING TREATMENT, FARM FIELDS LEFT FALLOW WILL BE PLANTED WITH ITALIAN RYEGRASS TO SERVE AS A COVER CROP AND INHIBIT THE SPREAD OF REED CANARYGRASS. FALLOW AREAS THAT WILL NOT BE GRADED IN PHASE 2 ACTIVITIES (SEE C-16) WILL BE PLANTED WITH A NATIVE SEED MIX. ITALIAN RYEGRASS IS AN UPRIGHT ANNUAL THAT BEHAVES LIKE A BIENNIAL OR SHORT-LIVED PERENNIAL. IT GROWS VIGOROUSLY IN WINTER AND EARLY SPRING.
4. R1, R3, AND R4 WILL BE HEAVILY PLANTED IN PHASE 2 TO SHADE OUT AND CONTROL REMAINING REED CANARYGRASS STANDS.

HIMALAYAN BLACKBERRY MANAGEMENT:

1. HIMALAYAN BLACKBERRY STANDS (TOTALING APPROXIMATELY 8 ACRES) OCCURRING IN PORTIONS OF THE RIPARIAN FRINGE OF NOOKACHAMPS CREEK IN THE NORTHERN AND SOUTHERN EXTENTS OF THE SITE WILL BE THE TARGETS FOR CONTROL MEASURES.
2. IRRADICATION MEASURES WILL COMMENCE WITH THE CUTTING OF VINES IN SPRING WHEN PLANTS BEGIN TO FLOWER (OR IN FALL PRIOR TO FLOODING) USING A BRUSH CUTTER OR BLADE-TYPE WEED-EATER. CANES SHOULD BE CUT AS CLOSE TO ROOT CROWN AS POSSIBLE.
3. MECHANICAL CONTROL EFFORTS WILL BE FOLLOWED BY IMMEDIATE APPLICATION OF GLYPHOSATE (RODEO®) TO FRESHLY-CUT CANE STUMPS USING A BACKPACK SPRAYER OR BRUSH.
4. FOLLOW-UP APPLICATIONS OF HERBICIDE AND/OR MECHANICAL REMOVAL OR CUTTING WILL PROVIDE LONG-TERM ADAPTIVE MANAGEMENT STRATEGIES FOR COMBATING NEW HIMALAYAN BLACKBERRY GROWTH.

© 2007 Herrera Environmental Inc. All rights reserved.

ONE INCH
AT FULL SIZE, IF NOT ONE INCH SCALE ACCORDINGLY

No.	REVISION	BY	APP'D	DATE
6	REVISION NO. 6	MRM	MS	2/08
5	REVISION NO. 5	MRM	MS	12/07
4	REVISION NO. 4	MRM	MS	9/07
3	REVISION NO. 3	MRM	MS	8/07
2	REVISION NO. 2	MRM	MS	6/06
1	REVISION NO. 1	MRM	MS	5/06

HERRERA ENVIRONMENTAL CONSULTANTS
2200 Sixth Avenue
Suite 1100
Seattle, Washington
98121-1820
206-441-9080
206-441-9108 FAX
http://www.herreralnc.com

DESIGNED: M. MERKELBACH
DRAWN: L. TURNIDGE
DESIGNED: -
DRAWN: -
DESIGNED: -
CHECKED: -
SCALE: AS NOTED
APPROVED: M. SPILLANE

SKAGIT ENVIRONMENTAL BANK
PHASE 1

PROJECT NOTES

DATE: FEBRUARY 2008
PROJECT NO: 04-02822-003
DRAWING NO: G-2
SHEET NO: 2 OF 46

Path: O:\proj\04-02822-003\Cad\Dwgs\Phase 1-2-3 Rev 6\G-2.dwg
Plot Date: 3/10/2008 11:25 AM Cad User: Laura Turnidge
Plot Style Table: Herrera.ctb Plotter: Adobe PDF

WORK SEQUENCE NOTES:

1. THIS WORK SEQUENCE PLAN IS SHOWN FOR GENERAL UNDERSTANDING OF THE PROJECT CONSTRAINTS IN RELATION TO CONSTRUCTION OF ENGINEERED LOG JAMS AND RELATED SITE ACTIVITY. CONTRACTOR IS RESPONSIBLE FOR INCORPORATING ALL EXISTING AND NEW MATERIALS INTO STRUCTURES AS NECESSARY.
2. A DETAILED ELJ WORK SEQUENCE AND PHASING PLAN SHALL BE DEVELOPED BY THE CONTRACTOR AND SUBMITTED FOR APPROVAL BY THE ENGINEER. ALL WORK SHALL BE PERFORMED IN ACCORDANCE WITH THE PLANS AND THE CONTRACTOR'S APPROVED ELJ WORK SEQUENCE AND PHASING PLAN. COORDINATION WITH THE PERMITTING AGENCIES AND MBRT WILL BE CONDUCTED ACCORDING TO PERMITS AND APPROVED MBI.
3. IN GENERAL, THE WORK SHALL BE SEQUENCED AND PERFORMED IN A MANNER THAT MINIMIZES IMPACTS TO THE CREEK AND AREA SURROUNDING THE WORK SITE.
4. INSTALL TESC MEASURES AS SHOWN ON ESC-1 AND ESC-2.
5. CONSTRUCT TEMPORARY ACCESS ROAD TO ACCESS WORK AREA.
6. CLEAR AND PREPARE STAGING AND STORAGE AREAS AS NECESSARY (GENERAL CONSTRUCTION NOTES).
7. INSTALL FISH BLOCKNETS. CONTRACTOR SHALL INFORM THE PROJECT BIOLOGIST THAT THE NETS HAVE BEEN INSTALLED.
8. ALLOW THE PROJECT BIOLOGIST SUFFICIENT TIME TO CLEAR REACH OF FISH. ALL FISH HANDLING ACTIVITIES TO BE DONE BY THE PROJECT BIOLOGIST.
9. BEGIN DEWATERING ACTIVITIES AS NEEDED.

SHORING AND DEWATERING NOTES:

1. GROUND WATER WILL BE ENCOUNTERED IN EXCAVATIONS. CONTRACTOR SHALL DEWATER AS NECESSARY FOR CONSTRUCTION AND INSPECTION.
2. CONTRACTOR SHALL DEWATER EXCAVATIONS AS NEEDED TO PROVIDE ADEQUATE EXCAVATION DEPTH TO ALLOW WOOD PLACEMENT. VERTICAL PILES MAY BE DRIVEN USING VIBRATORY TECHNIQUES.
3. CONTRACTOR SHALL DESIGN ALL REQUIRED SHORING AND WATER EXCLUSION STRUCTURES. HYDROSTATIC PRESSURES SHALL BE ADDED TO LATERAL PRESSURES DUE TO EARTH, SURCHARGES AND SPECIAL PRESSURES. SPECIAL PRESSURES MAY INCLUDE BUT ARE NOT LIMITED TO HYDROSTATIC PRESSURES RESULTING FROM BACKWATER CONDITIONS, TEMPORARY SHORING SEEPAGE, MACHINERY SURCHARGE AND FLUCTUATING GROUND WATER.
4. OTHER SURCHARGES SHALL BE DETERMINED BY THE CONTRACTOR ON THE BASIS OF CONSTRUCTION TRAFFIC, EQUIPMENT STORAGE, SPOILS HANDLING, WORK SEQUENCE AND OTHER FACTORS.
5. ALL TEMPORARY SHORING SYSTEMS SHALL BE DESIGNED WITH A MINIMUM FACTOR OF SAFETY OF 1.4 (FS=1.4).

DITCH FILLING NOTES:

1. DITCHES WILL BE FILLED WITH MATERIAL FROM ADJACENT BERMS.
2. WHERE ADJACENT BERM VOLUMES ARE NOT SUFFICIENT TO FILL DITCHES, ANTICIPATED LOCATIONS OF PHASE 2 HIGH FLOW BACK CHANNELS WILL BE GENTLY GRADED FOR MATERIAL.
3. ALL BERMS AND AREAS GRADED FOR MATERIAL TO FILL DITCHES WILL BE STRIPPED OF VEGETATION PRIOR TO GRADING. WHERE REED CANARYGRASS IS PRESENT, THE FIRST TWO (2) FEET WILL BE STRIPPED AND COMPOSTED.
4. VEGETATIVE MATERIAL REMOVED DURING STRIPPING WILL BE COMPOSTED IN UPLAND AREAS.
5. ALL DISTURBED AREAS ASSOCIATED WITH DITCH FILLING WILL BE REPLANTED WITH TEMPORARY EROSION CONTROL VEGETATION AND LATER WITH WETLAND PLANTS. SEE PHASE 1 PROJECT WORK ELEMENTS NOTES ON G-2.
6. WHERE DITCHES TERMINATE AT STREAM BANKS, BANK STABILIZATION WILL BE INSTALLED TO PREVENT HEAD CUTS AND TO PREVENT SEDIMENT FROM ENTERING THE STREAM (SEE R-6/R-7).

WATER MANAGEMENT NOTES:

1. EXCAVATIONS THAT HAVE THE POTENTIAL TO IMPACT THE WETTED CHANNEL SHALL BE ISOLATED FROM THE ACTIVE CHANNEL. ISOLATION MEANS SHALL CONSIST OF SILT BOOMS, SHEET PILE, BULK BAGS, BLADDER DAMS OR OTHERS AS NECESSARY TO PREVENT IMPACTS TO WATER QUALITY.
2. SEE SHEETS ESC-1 AND ESC-2 FOR ADDITIONAL NOTES AND TYPICAL DRAWINGS FOR EROSION AND SEDIMENTATION CONTROL. WATER PUMPED FROM EXCAVATED AREA SHALL BE RELEASED TO THE EXISTING STORMWATER PONDS. THE WATER SHALL NOT BE DIRECTLY DISCHARGED TO ANY CREEK.
3. ANY DEWATERING ACTIVITIES SHALL NOT IMPACT WATER QUALITY.
4. CONSTRUCTION DEWATERING SHALL BE MAINTAINED 24 HOURS PER DAY DURING CONSTRUCTION, PUMPS SHALL BE MAINTAINED BY THE CONTRACTOR DURING WORKING AND NON-WORKING HOURS.
5. DIVERSION CHANNELS SHALL BE LINED WITH 15 MIL PE LINER OR APPROVED EQUAL, TO PREVENT EROSION.

GENERAL CONSTRUCTION NOTES:

1. WORK INCLUDES CONSTRUCTION OF THREE ENGINEERED LOG JAM (ELJ) STRUCTURES AS SHOWN ON THE PLANS. STRUCTURES ARE TO BE CONSTRUCTED INSTREAM.
2. SLASH SHALL BE COMPOSED OF TREES, LIMBS, ROOTWADS, STUMPS, BRUSH AND OTHER MATERIAL GENERATED DURING LAND CLEARING. SLASH MATERIAL MAY BE OF VARIOUS SIZES < 12" DIAMETER. SLASH MATERIALS SHALL NOT CONTAIN COBBLES. AGGREGATE MATERIAL PASSING A TWO INCH SIEVE (SANDS AND GRAVELS) SHALL NOT EXCEED 5% OF THE TOTAL SLASH MATERIAL BY VOLUME AND SHALL NOT CONTAIN SILTY OR CLAYEY MATERIAL THAT WILL IN THE OPINION OF THE ENGINEER, CAUSE EXCESSIVE TURBIDITY WHEN THE WATERS OF CREEK CONTACT THE MATERIAL.
3. CONSTRUCTION MATERIAL STAGING AREAS TO BE LOCATED AS SHOWN ON THE PLANS. MATERIAL SHALL NOT BE STORED OUTSIDE OF IDENTIFIED STAGING AREAS (C-1). THE CONTRACTOR SHALL PROTECT MATERIALS FROM DAMAGE AT ALL TIMES.
4. THE CONTRACTOR SHALL LIMIT MACHINERY MOVEMENT TO CONSTRUCTION AREAS DEFINED ON PLANS OR IDENTIFIED AS ACCEPTABLE BY ENGINEER.
5. CLEARING LIMITS SHALL NOT BE EXPANDED UNLESS APPROVED BY ENGINEER.
6. CONTRACTOR SHALL DEWATER EXCAVATIONS AS NEEDED TO ENABLE PLACEMENT OF KEY LOGS AND PILES.
7. WATER PUMPED FROM EXCAVATED AREAS SHALL BE RELEASED TO UPGRADIENT AREAS (SEE SHEETS ESC-1 AND ESC-2). TURBID WATER FROM THE EXCAVATION SHALL NOT BE DIRECTLY DISCHARGED TO CREEK AT ANY TIME.
8. WATER PUMPED FROM CREEK UPSTREAM OF THE CONSTRUCTION AREA SHALL BE PUMPED TO AN ENERGY DISSIPATION STRUCTURE DOWNSTREAM OF THE CONSTRUCTION AREA (SEE SHEETS ESC-1 AND ESC-2). THE UPSTREAM INTAKE FOR THE WATER PUMPS SHALL BE ISOLATED FROM THE STREAM BY A FISH BLOCKNET. ADDITIONALLY THE PUMP INTAKE HOSE SHALL HAVE A SCREEN CONFORMING TO WDFW GUIDELINES.
9. EXCAVATIONS SHALL BE INSPECTED BY ENGINEER PRIOR TO PLACING ANY ELJ MATERIALS.
10. CONTRACTOR SHALL REMOVE ANY AND ALL EQUIPMENT, UNUSED MATERIALS, AND TEMPORARY FACILITIES FROM SITE UPON COMPLETION OF WORK.
11. ALL EXISTING FENCES ALONG STREAMS SHALL BE REMOVED.
12. STAGING AREA 1 WILL REMAIN UPLAND. STAGING AREA 2 WILL HAVE TO BE RE-GRADED AND SOILS RESTORED TO SUPPORT WETLAND CONDITIONS AFTER THE COMPLETION OF PHASE 2 ACTIVITIES.
13. EXISTING BRIDGES OVER THE NOOKACHAMPS AND EAST FORK NOOKACHAMPS WILL REMAIN IN PLACE TO SUPPORT LONG-TERM MONITORING AND MAINTENANCE. ALL CREOSOTE TREATED TIMBER WILL BE REMOVED AND REPLACED WITH NON-TREATED WOOD PRIOR TO THE COMPLETION OF PHASE 1 ACTIVITIES.

© 2007 Herrera Environmental Inc. All rights reserved.

ONE INCH
AT FULL SIZE, IF NOT ONE INCH SCALE ACCORDINGLY

No.	REVISION	BY	APP'D	DATE
6	REVISION NO. 6	MRM	MS	2/08
5	REVISION NO. 5	MRM	MS	
4	REVISION NO. 4	MRM	MS	9/07
3	REVISION NO. 3	MRM	MS	8/07
2	REVISION NO. 2	MRM	MS	6/06
1	REVISION NO. 1	MRM	MS	5/06

HERRERA ENVIRONMENTAL CONSULTANTS
2200 Sixth Avenue
Suite 1100
Seattle, Washington
98121-1820
206-441-9080
206-441-9108 FAX
http://www.herreralnc.com

DESIGNED: M. MERKELBACH	DRAWN: L. TURNIDGE
DESIGNED: -	DRAWN: -
DESIGNED: -	CHECKED: -
SCALE: AS NOTED	APPROVED: M. SPILLANE

SKAGIT ENVIRONMENTAL BANK
PHASE 1

CONSTRUCTION NOTES

DATE: FEBRUARY 2008
PROJECT NO: 04-02822-003
DRAWING NO: G-3
SHEET NO: 3 OF 46

Path: O:\proj\04-02822-003\Cad\Dwgs\Phase 1-2-3 Rev 6\G-3.dwg
Plot Date: 3/5/2008 4:04 PM Cad User: Wojciech Wieszczedinski
Plot Style Table: Herrera.ctb Plotter: Adobe PDF

PHASE 2 PROJECT WORK ELEMENTS:

1. REGRADE ENTIRE SITE BASED ON THE WATER TABLE RESPONSE FROM PHASE 1 ACTIVITIES. GRADING ACTIVITIES WILL NOT COMMENCE UNTIL APPROVED BY THE MBRT.

2. EXCAVATE FOUR HIGH-FLOW BANK CHANNELS OFF NOOKACHAMPS CREEK AND THE EAST FORK NOOKACHAMPS CREEK TO PROVIDE EMERGENT WETLANDS WITH SCRUB-SHRUB HUMMOCKS AND WINTER JUVENILE SALMONOID REARING HABITAT.

3. REGRADE MUD CREEK TO CREATE POSITIVE FLOW TO NOOKACHAMPS CREEK TO ALLEVIATE UPSTREAM FLOODING.

4. EXCAVATED SOILS WILL BE PERMANENTLY STOCKPILED WITHIN THE BOUNDARIES OF CLEAR VALLEY FARM PROPERTY. A MAJORITY OF SOIL WILL STOCKPILED OUTSIDE OF THE 100-YEAR FLOODPLAIN. THE REMAINDER WILL BE LOCATED WITHIN THE MITIGATION BANK TO CREATE FLOOD REFUGE HABITAT.

5. THE ENTIRE SITE EXCEPT THOSE AREAS INDICATED ON C-19 WILL BE PLANTED WITH NATIVE VEGETATION TO CREATE A DIVERSE MOSAIC OF EMERGENT, SCRUB-SHRUB, AND FOREST MOSAIC WETLANDS. BUFFER AREAS ALONG NOOKACHAMPS CREEK WILL BE PLANTED IN PHASE 2 AS SHOWN IN C-20. THE REMAINING BUFFER IN THE AGRICULTURAL FIELDS WILL BE PLANTED IN PHASE 3.

PHASE 2 WATER AND ELECTRIC EASEMENT NOTES:

1. PRIOR TO PHASE 2 ACTIVITIES, A RIGHT-OF-WAY/UTILITY PERMIT APPLICATION IS REQUIRED BY SKAGIT COUNTY PUBLIC WORKS (360-336-9400). THE PERMIT WILL EXPIRE 90 DAYS FROM THE DATE OF ISSUANCE.

2. SKAGIT COUNTY PUBLIC WORKS ALLOWS THE PLANTING OF NATIVE TREE AND SHRUB SPECIES WITHIN THE WATER LINE EASEMENT.

3. PUGET SOUND ENERGY (PSE) REQUIRES THE SUBMISSION OF A "CONSENT TO USE PUGET SOUND ENERGY RIGHT-OF-WAY". POWER POLE LOCATIONS ARE FOUND ON C-17. THE FOLLOWING ACTIONS WILL BE TAKEN BASED ON PSE GUIDANCE:

   - AREAS WITHIN THE PSE ROW WILL BE VEGETATED WITH SPECIES THAT GROW TO A MAXIMUM HEIGHT OF 15 FEET.
   - NO WATER SHALL COLLECT AT THE BASE OF STRUCTURES.
   - THE EXTENT OF EXCAVATION WITHIN 20 FEET OF PSE STRUCTURE WILL BE NO GREATER THAN 2 FEET.

PHASE 3 PROJECT WORK ELEMENTS:

1. FINAL SITE GRADING OF AREAS PROPOSED AS WETLAND WHICH HAVE NOT DEVELOPED HYDRIC CONDITIONS.

2. TRANSFORM PORTIONS OF THE TEMPORARY ACCESS ROAD INTO A FOREST WETLAND MOSAIC THROUGH GRADING ACTIVITIES. SEE DRAWING C-29.

3. REMAINING BUFFERS WILL BE PLANTED (C-20) AND STAGING AREAS WILL BE REMOVED AND RESTORED.

PHASE 3 PROPOSED WETLAND CLASSIFICATIONS:

1. SEE DRAWING C-29. THE PROPOSED WETLAND CLASSIFICATIONS THAT WILL RESULT FROM COMPLETION OF ALL PHASES ARE:

	ACRES
SYSTEM: PALUSTRINE, CLASS: EMERGENT	(52)
SYSTEM: PALUSTRINE, CLASS: SCRUB-SHRUB	(80)
SYSTEM: PALUSTRINE, CLASS: FORESTED MOSAIC	(102)
UPLAND: FORESTED ISLANDS	(57)
BUFFER	(85)
UTILITY EASEMENT	(09)
RIVERINE	(11)
TOTAL=	396

2. IN DESIGNING THE LOCATIONS OF THE PROPOSED WETLAND AREA POLYGONS, ON-SITE PLANT REFERENCE SITE DATA WILL BE USED TO DETERMINE HYDROLOGY REQUIRED TO ACHIEVE THE BANK PERFORMANCE STANDARDS.

3. SEE DRAWING R-1 FOR EXISTING WETLAND AREAS.

4. SITE GRADING WILL BE BASED ON EFFECTIVE GROUND WATER ELEVATIONS THAT WILL SUPPORT THE WETLAND CLASSIFICATION DISTRIBUTION. SEE SHEET R-4 FOR SOIL EXCAVATION TO GROUND WATER FROM EXISTING SURFACE. THIS DATA IS BASED ON 2ND QUARTER GROUND 2005/2006/2007 WATER ELEVATIONS. A GRADING PLAN IN THIS PHASE MUST BE APPROVED BY THE MBRT PRIOR TO ANY GRADING ACTIVITIES.

5. SEE DRAWING C-19 FOR PHASE 2 PROPOSED PLANTING PLAN.

6. SEE DRAWING C-29 FOR PHASE 3 PROPOSED PLANTING PLAN.

© 2007 Herrera Environmental, Inc. All rights reserved.

ONE INCH
AT FULL SIZE, IF NOT ONE INCH SCALE ACCORDINGLY

No.	REVISION	BY	APP'D	DATE
6	REVISION NO. 6	MRM	MS	2/08
5	REVISION NO. 5	MRM	MS	12/07
4	REVISION NO. 4	MRM	MS	9/07
3	REVISION NO. 3	MRM	MS	8/07
2	REVISION NO. 2	MRM	MS	6/06
1	REVISION NO. 1	MRM	MS	5/06

HERRERA ENVIRONMENTAL CONSULTANTS
2200 Sixth Avenue
Suite 1100
Seattle, Washington
98121-1820
206-441-9080
206-441-9108 FAX
http://www.herreralnc.com

DESIGNED: M. MERKELBACH
DRAWN: L. TURNIDGE
DESIGNED: -
DRAWN: -
DESIGNED: -
CHECKED: -
SCALE: AS NOTED
APPROVED: M. SPILLANE

SKAGIT ENVIRONMENTAL BANK
PHASE 1, 2, & 3

CONSTRUCTION NOTES

DATE: FEBRUARY 2008
PROJECT NO: 04-02822-003
DRAWING NO: G-4
SHEET NO: 4 OF 46

Path: O:\proj\04-02822-003\Cad\Dwgs\Phase 1-2-3 Rev 6\G-4.dwg
Plot Date: 3/5/2008 4:05 PM Cad User: Wojciech Wieszczeciński
Plot Style Table: Herrera.ctb Plotter: Adobe PDF

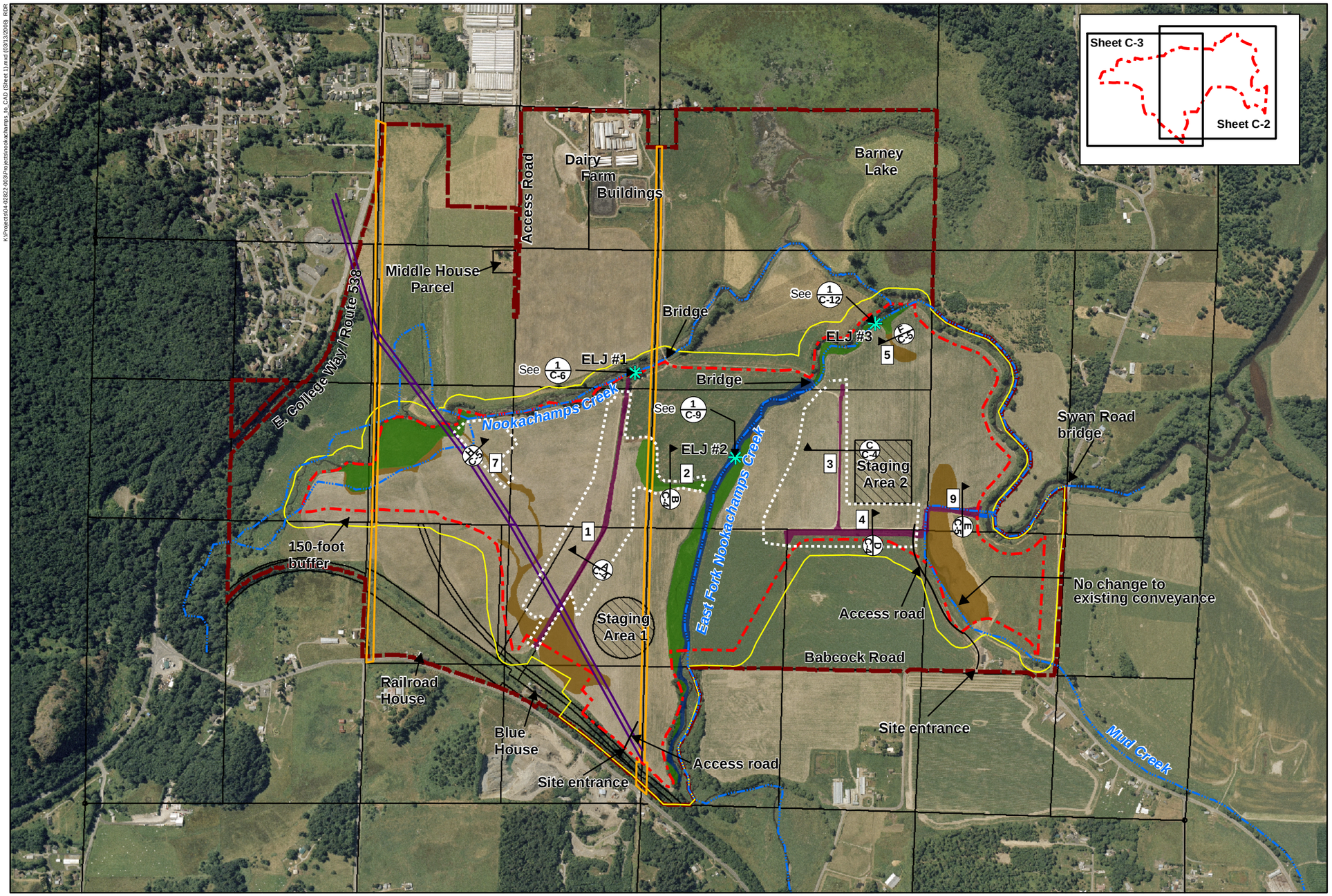

0 500 1,000 2,000 ft

1 in = 1000 ft

N

Legend :

- 1 Ditch number
- ELJ - Grade control structure
- A/C-5 Cross-section location
- Staging area
- Stream
- Waterline easement
- Powerline easement
- Mitigation bank boundary
- Clear Valley Farm property boundary
- Edge of buffer
- Parcel boundary
- Construction limit

Existing wetlands

- Palustrine: persistent
- Palustrine: non-persistent and plowed
- Palustrine: ditch
- Riverine

© 2006 Herrera Environmental, Inc. All rights reserved.

K:\Project\04-02822-003\Projects\nookachamps_ip, CAD (Sheet 1).mxd (03/13/2008) RDR

No.	REVISION	BY	APPD	DATE
6	REVISION NO. 6	MM	MS	02/08
5	REVISION NO. 5	MM	MS	12/07
4	REVISION NO. 4	MM	MS	09/07
3	REVISION NO. 3	MM	MS	07/07

HERRERA ENVIRONMENTAL CONSULTANTS
2200 Sixth Avenue
Suite 1100
Seattle, Washington
98121-1820
206-441-9080
206-441-9108 FAX

DESIGNED: M. MERKELBACH	DRAWN: J. SCHMIDT
DESIGNED:	DRAWN:
DESIGNED:	CHECKED:
DESIGNED:	APPROVED: M. SPILLANE

SKAGIT ENVIRONMENTAL BANK

PHASE 1

EXISTING CONDITIONS AND PROPOSED STRUCTURES

DATE: FEBRUARY 2008
PROJECT NO: 04-02822-003
DRAWING NO: C-1
SHEET NO: 5 of 46

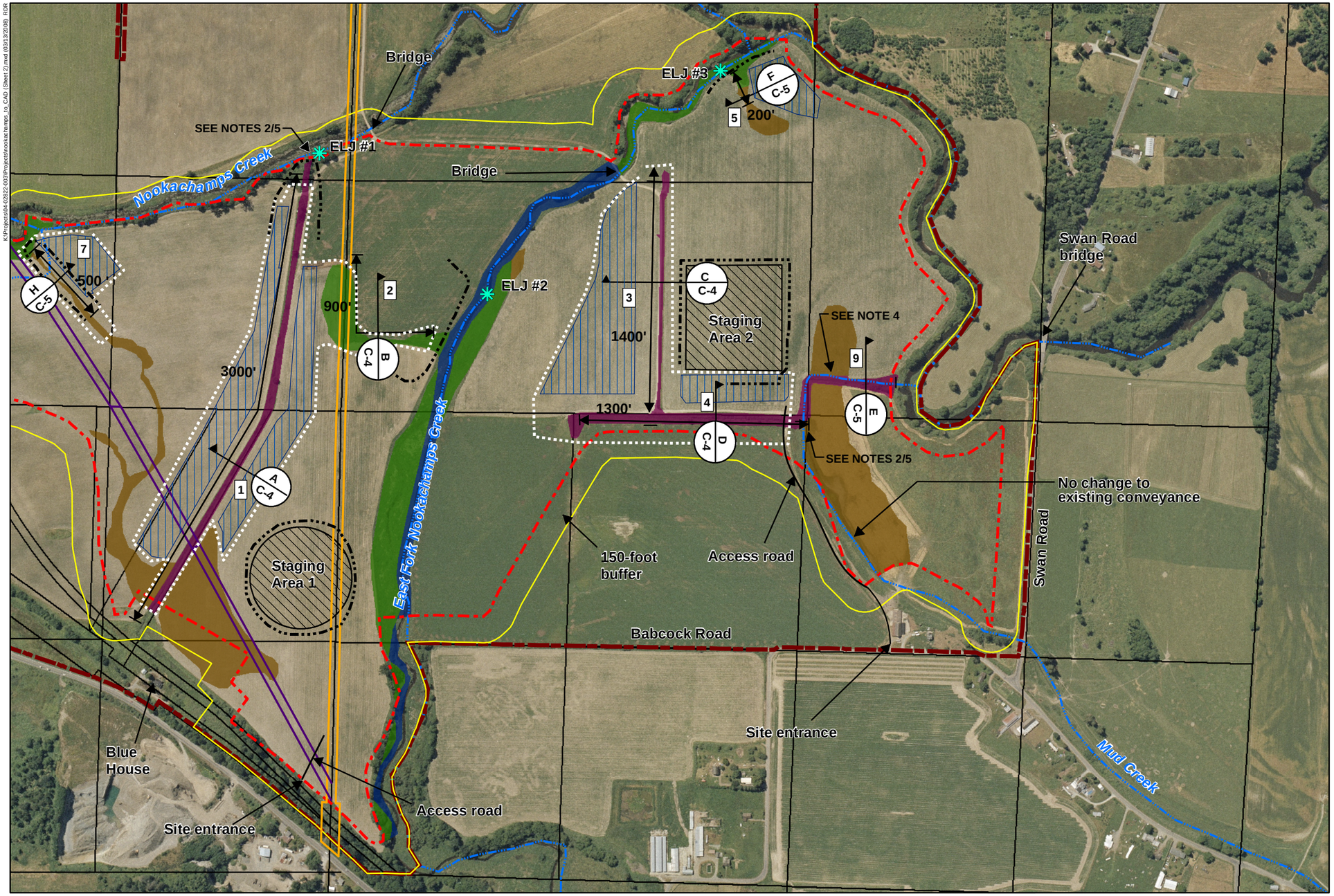

0 300 600 1,200 ft

1 in = 600 ft

N

Legend :

- ELJ - Grade control structure
- Cross-section location and reference sheet
- 450' Existing ditch length to be filled (ft)
- 1 Ditch number
- Staging area
- Stream
- Waterline easement
- Powerline easement
- Mitigation bank boundary
- Clear Valley Farm property boundary
- Edge of buffer
- Barrow
- Parcel boundary
- Silt fence
- Construction limit

Existing wetlands

- Palustrine: persistent
- Palustrine: non-persistent and plowed
- Palustrine: ditch
- Riverine

Notes:

1. **Construct head cut protection at the end of all ditches when filled.**
2. **Install temporary silt fence at ends of each ditch.**
3. **No fill in Ditch 9.**
4. **See R-6/R-7 for details photos of ditches.**

© 2006 Herrera Environmental, Inc. All rights reserved.

No.	REVISION	BY	APPD	DATE
6	REVISION NO. 6	MM	MS	02/08
5	REVISION NO. 5	MM	MS	12/07
4	REVISION NO. 4	MM	MS	09/07
3	REVISION NO. 3	MM	MS	07/07

HERRERA ENVIRONMENTAL CONSULTANTS
2200 Sixth Avenue
Suite 1100
Seattle, Washington
98121-1820
206-441-9080
206-441-9108 FAX

DESIGNED: M. MERKELBACH
DRAWN: J. SCHMIDT
DESIGNED:
DRAWN:
DESIGNED:
CHECKED:
DESIGNED:
APPROVED: M. SPILLANE

SKAGIT ENVIRONMENTAL BANK

PHASE 1
SITE PLAN AND PROPOSED WORK

DATE: FEBRUARY 2008
PROJECT NO: 04-02822-003
DRAWING NO: C-2
SHEET NO: 6 of 46

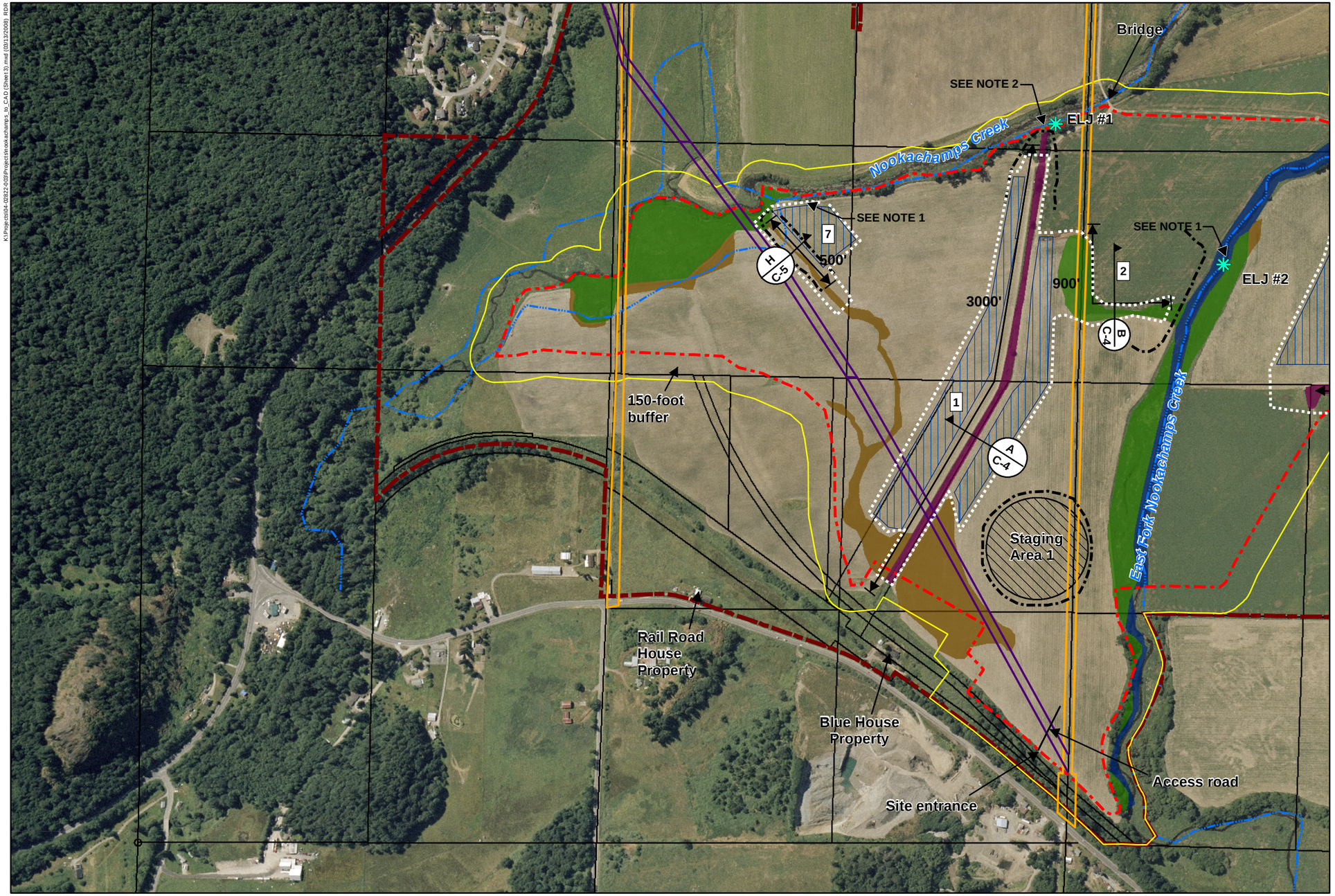

0 300 600 1,200 ft

1 in = 600 ft

N

Legend :

- ELJ - Grade control structure
- A C-4 — Cross-section location and reference sheet
- 450' — Existing ditch length to be filled (ft)
- 1 — Ditch number
- Staging area
- Stream
- Waterline easement
- Powerline easement
- Mitigation bank boundary
- Clear Valley Farm property boundary
- Edge of buffer
- Barrow
- Parcel boundary
- Silt fence
- Construction limit

Existing wetlands

- Palustrine: persistent
- Palustrine: non-persistent and plowed
- Palustrine: ditch
- Riverine

Notes:

1. **Construct head cut protection at the end of all ditches when filled.**
2. **Install temporary silt fence at ends of each ditch.**

© 2006 Herrera Environmental, Inc. All rights reserved.

K:\Projects\04-02822-003\Project\Nookachamps_to_CAD (Sheet 3).mxd (03/13/2008) RDR

No.	REVISION	BY	APPD	DATE
6	REVISION NO.6	MM	MS	02/08
5	REVISION NO.5	MM	MS	12/07
4	REVISION NO.4	MM	MS	09/07
3	REVISION NO.3	MM	MS	07/07

HERRERA ENVIRONMENTAL CONSULTANTS
2200 Sixth Avenue
Suite 1100
Seattle, Washington
98121-1820
206-441-9080
206-441-9108 FAX

DESIGNED: M. MERKELBACH	DRAWN: J. SCHMIDT
DESIGNED:	DRAWN:
DESIGNED:	CHECKED:
DESIGNED:	APPROVED: M. SPILLANE

SKAGIT ENVIRONMENTAL BANK

PHASE 1
SITE PLAN AND PROPOSED WORK

DATE: FEBRUARY 2008
PROJECT NO: 04-02822-003
DRAWING NO: C-3
SHEET NO: 7 of 46

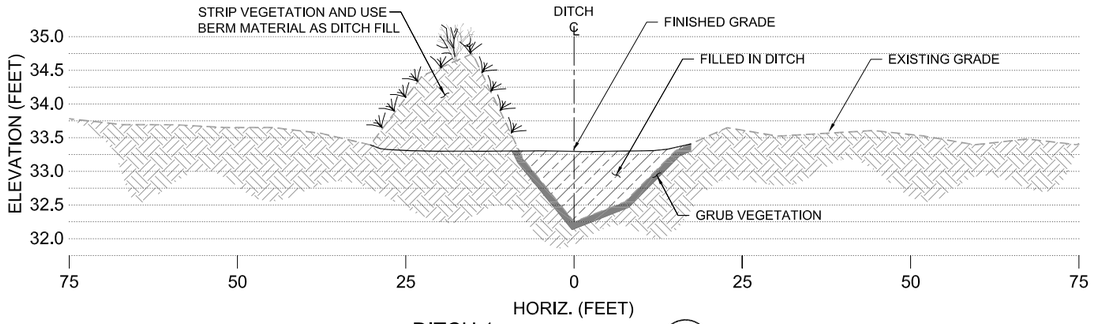

DITCH 1 (A / -)
SCALE: N.T.S.

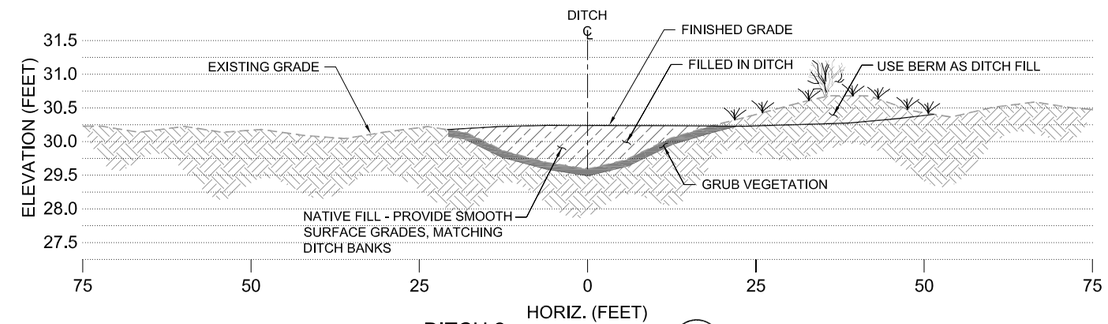

DITCH 2 (B / -)
SCALE: N.T.S.

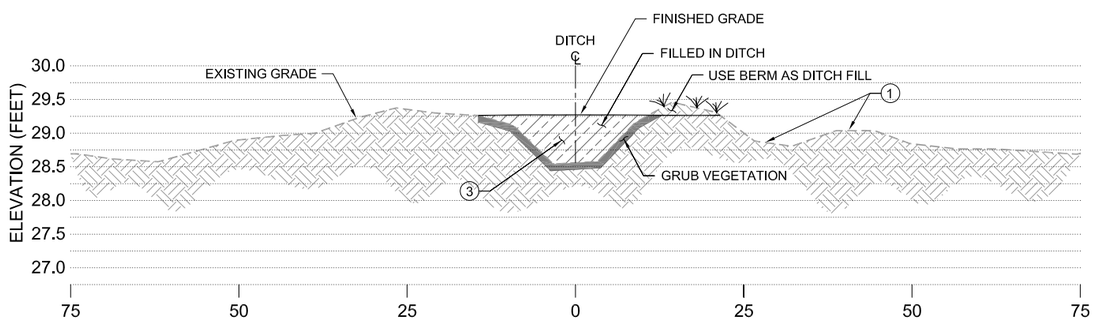

DITCH 3 (C / -)
SCALE: N.T.S.

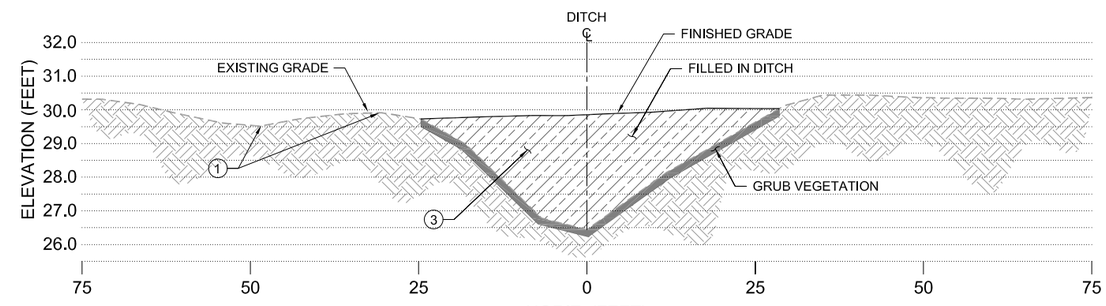

DITCH 4 (D / -)
SCALE: N.T.S.

CROSS SECTION NOTES:

1. FINISHED GRADE SHALL BE FREE OF DIPS, DEPRESSIONS, OR MOUNDS.
2. CUT AND FILL LINES ARE SHOWN GRAPHICALLY ONLY AND DO NOT REFLECT GRADING LIMITS REQUIRED TO MEET VOLUMES INDICATED IN DITCH TABLE.
3. SEE DITCH FILLING NOTES ON DRAWING G-3.
4. ELEVATIONS REFERENCE DISTANCE IN FEET ABOVE MEAN SEA LEVEL, VERTICAL DATUM NAVD 88.

DITCH TABLE

DITCH ID #	DITCH LENGTH (FT)	DITCH WIDTH (FT)	DITCH DEPTH (FT)	DITCH VOLUME (CY)	BERM VOLUME (CY)	EXCESS FILL NEEDED (CY)
1	3000	30	1	1967	1858	109
2	900	36	0.6	351	246	105
3	1400	18	0.6	272	252	20
4	1300	66	5	7262	0	7262
5	200	31.0	2	259	51	208
7	500	97.3	1.4	1261	0	1261
9	800	54.2	7.1	0	0	0
TOTALS	8100	332.5	17.7	11372	2407	8965

* DITCHES 6 AND 8 HAVE BEEN OMITTED SINCE THEY ARE MINOR LANDSCAPE FEATURES AND WILL BE REGRADED IN PHASE 2.

© 2007 Herrera Environmental, Inc. All rights reserved.

ONE INCH
AT FULL SIZE, IF NOT ONE INCH SCALE ACCORDINGLY

No.	REVISION	BY	APP'D	DATE
6	REVISION NO. 6	MRM	MS	2/08
5	REVISION NO. 5	MRM	MS	12/07
4	REVISION NO. 4	MRM	MS	9/07
3	REVISION NO. 3	MRM	MS	8/07
2	REVISION NO. 2	MRM	MS	6/06
1	REVISION NO. 1	MRM	MS	5/06

HERRERA ENVIRONMENTAL CONSULTANTS
2200 Sixth Avenue
Suite 1100
Seattle, Washington
98121-1820
206-441-9080
206-441-9108 FAX
http://www.herreralnc.com

DESIGNED: C. BARTON
DRAWN: L. TURNIDGE
DESIGNED: -
DRAWN: -
DESIGNED: -
CHECKED: M. MERKELBACH
SCALE: AS NOTED
APPROVED: M. SPILLANE

SKAGIT ENVIRONMENTAL BANK
PHASE 1

GRADING CROSS-SECTIONS

DATE: FEBRUARY 2008
PROJECT NO: 04-02822-003
DRAWING NO: C-4
SHEET NO: 8 OF 46

Path: O:\proj\04-02822-003\Cad\Dwgs\Phase 1-2-3 Rev 6\C-4.dwg
Plot Date: 3/5/2008 3:42 PM Cad User: Wojciech Wieszczeciński
Plot Style Table: Herrera.ctb Plotter: Adobe PDF

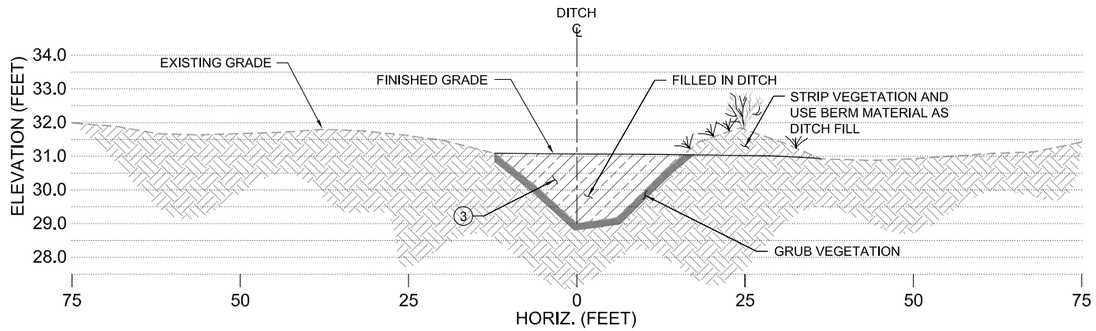

DITCH 5 (F / -)
SCALE: N.T.S.

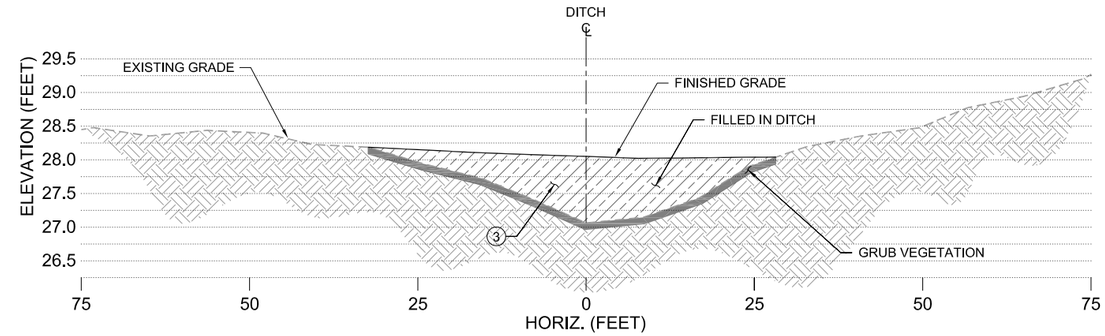

DITCH 7 (H / -)
SCALE: N.T.S.

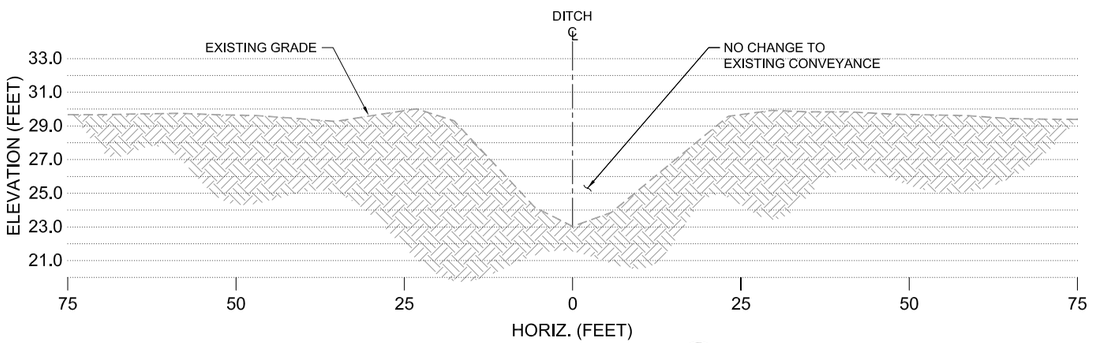

DITCH 9 (E / -)
SCALE: N.T.S.

CROSS SECTION NOTES:

1. FINISHED GRADE SHALL BE FREE OF DIPS, DEPRESSIONS, OR MOUNDS.
2. CUT AND FILL LINES ARE SHOWN GRAPHICALLY ONLY AND DO NOT REFLECT GRADING LIMITS REQUIRED TO MEET VOLUMES INDICATED IN DITCH TABLE.
3. SEE DITCH FILLING NOTES ON DRAWING G-3.
4. ELEVATIONS REFERENCE DISTANCE IN FEET ABOVE MEAN SEA LEVEL, VERTICAL DATUM NAVD 88.

DITCH TABLE

DITCH ID #	DITCH LENGTH (FT)	DITCH WIDTH (FT)	DITCH DEPTH (FT)	DITCH VOLUME (CY)	BERM VOLUME (CY)	EXCESS FILL NEEDED (CY)
1	3000	30	1	1967	1858	109
2	900	36	0.6	351	246	105
3	1400	18	0.6	272	252	20
4	1300	66	5	7262	0	7262
5	200	31.0	2	259	51	208
7	500	97.3	1.4	1261	0	1261
9	800	54.2	7.1	0	0	0
TOTALS	8100	332.5	17.7	11372	2407	8965

* DITCHES 6 AND 8 HAVE BEEN OMITTED SINCE THEY ARE MINOR LANDSCAPE FEATURES AND WILL BE REGRADED IN PHASE 2.

© 2007 Herrera Environmental, Inc. All rights reserved.

ONE INCH
AT FULL SIZE, IF NOT ONE INCH SCALE ACCORDINGLY

No.	REVISION	BY	APP'D	DATE
6	REVISION NO. 6	MRM	MS	2/08
5	REVISION NO. 5	MRM	MS	12/07
4	REVISION NO. 4	MRM	MS	9/07
3	REVISION NO. 3	MRM	MS	8/07
2	REVISION NO. 2	MRM	MS	6/06
1	REVISION NO. 1	MRM	MS	5/06

HERRERA ENVIRONMENTAL CONSULTANTS
2200 Sixth Avenue
Suite 1100
Seattle, Washington
98121-1820
206-441-9080
206-441-9108 FAX
http://www.herreralnc.com

DESIGNED: C. BARTON
DRAWN: L. TURNIDGE
DESIGNED: -
DRAWN: -
DESIGNED: -
CHECKED: M. MERKELBACH
SCALE: AS NOTED
APPROVED: M. SPILLANE

SKAGIT ENVIRONMENTAL BANK
PHASE 1

GRADING CROSS-SECTIONS

DATE: FEBRUARY 2008
PROJECT NO: 04-02822-003
DRAWING NO: C-5
SHEET NO: 9 OF 46

Path: O:\proj\04-02822-003\Cad\Dwgs\Phase 1-2-3 Rev 6\C-5.dwg
Plot Date: 3/5/2008 3:42 PM Cad User: Wojciech Wieszczecinski
Plot Style Table: Herrera.ctb Plotter: Adobe PDF

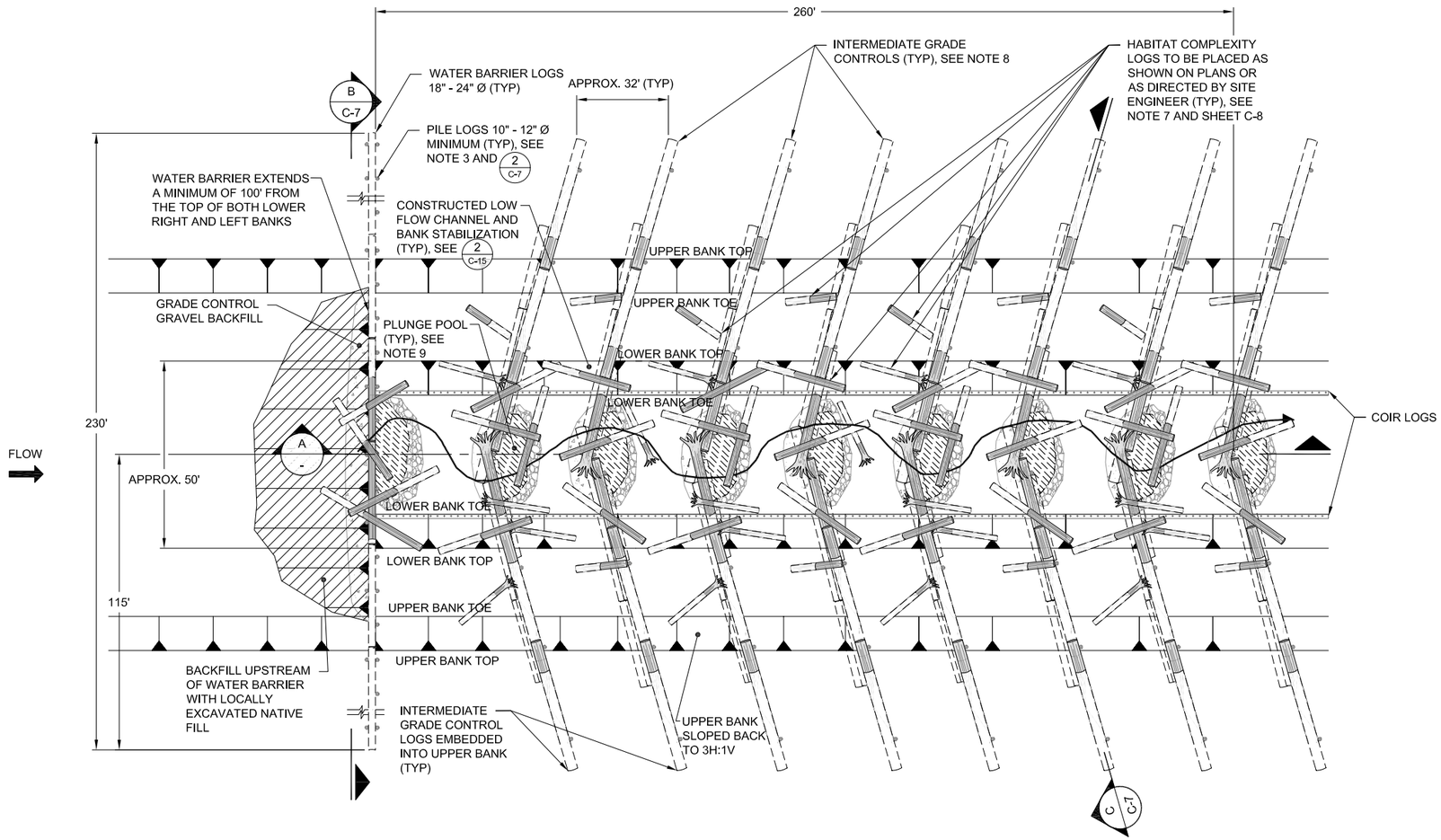

PLAN VIEW - GRADE CONTROL STRUCTURE #1

SCALE: NOTED

1 / C-1

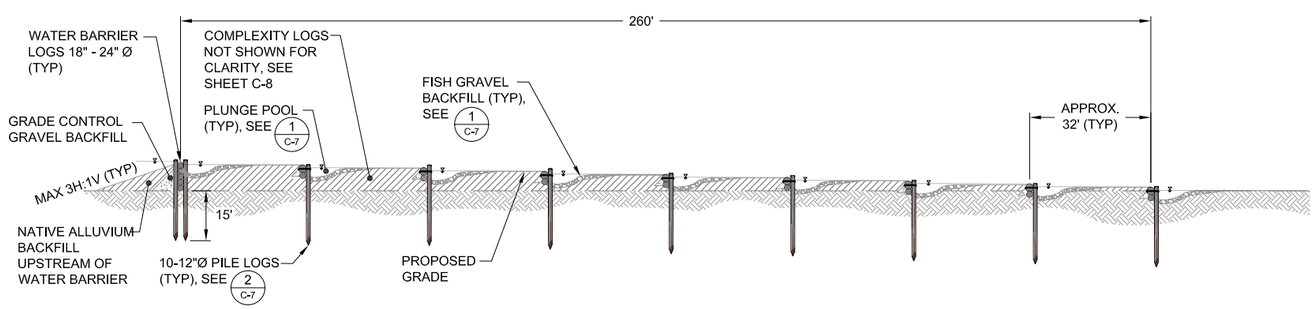

PROFILE - GRADE CONTROL STRUCTURE #1

SCALE: NOTED

A / -

20 0 20 40

1"=20'

LEGEND

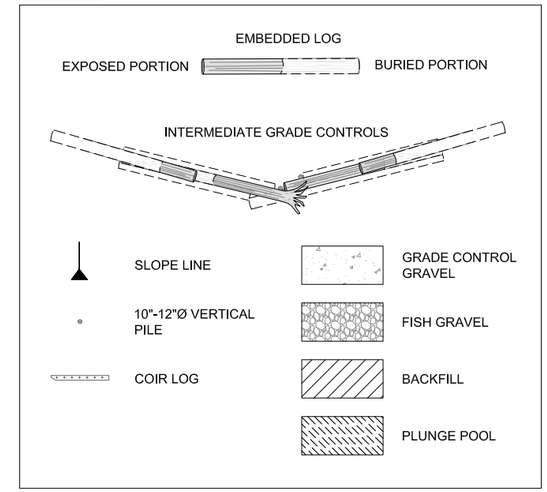

ELJ CONSTRUCTION NOTES:

1. PRIOR TO ELJ CONSTRUCTION INSTALL WATER MANAGEMENT AND TESC BMPS. SEE DRAWINGS ESC-1 AND ESC-2.
2. SHAPE CONSTRUCTED CREEK CHANNEL SLOPE TO ACHIEVE MAXIMUM 3H:1V BANK SLOPE AND INSTALL BANK STABILIZATION, AS SHOWN ON SHEET C-15.
3. PILE LOGS SHALL BE DRIVEN USING HYDRAULIC STATIC LOADING OR VIBRATORY PUSH TECHNOLOGY. NO IMPACT HAMMERS SHALL BE USED.
4. CONSTRUCT LOW FLOW CHANNEL AND FLOODPLAIN BENCH AS SHOWN ON SHEET C-15.
5. CONSTRUCT LOW FLOW CHANNEL AND GRADE CONTROL STRUCTURES SUCH THAT THERE ARE NO VERTICAL DROPS GREATER THAN 0.8 FEET.
6. ALL LOGS SHALL BE UNTREATED FIR.
7. HABITAT COMPLEXITY LOG G EMBEDMENT LENGTH MINIMUM OF 1/2 LOG LENGTH AND AN AVERAGE DEPTH OF 3 FEET. HABITAT COMPLEXITY LOGS H AND I EMBEDDED OVER 2/3 THE LOG LENGTH AND AN AVERAGE OF 2 FEET.
8. INTERMEDIATE GRADE CONTROLS MIRRORED EVERY OTHER.
9. PLUNGE POOLS SHALL BE OVER EXCAVATED AND BACKFILLED WITH FISH GRAVEL TO A MINIMUM THICKNESS OF 1', SEE SHEET C-7 FOR GRAIN SIZE DISTRIBUTION.
10. HABITAT COMPLEXITY LOGS SHALL INCLUDE ALL LOGS NOT INCLUDED IN EITHER THE INTERMEDIATE GRADE CONTROL STRUCTURES OR THE WATER BARRIER STRUCTURE. THE LOGS ARE DESIGNED TO ADD HYDRAULIC COMPLEXITY TO THE CHANNEL. FINAL LOCATIONS MAY BE ALTERED IN THE FIELD DURING CONSTRUCTION BY SITE ENGINEER.
11. ABANDON DIVERSION CHANNEL AFTER COMPLETION OF CONSTRUCTION.
12. ALL STREAM BANKS DISTURBED DURING CONSTRUCTION SHALL BE REVEGETATED WITH NATIVE RIPARIAN VEGETATION. SEE C-21.
13. ELJ CONSTRUCTION AND DISTURBANCE LIMITS SHALL BE STAKED BY CONTRACTOR A MINIMUM OF 2 WORKING DAYS PRIOR TO COMMENCEMENT OF ELJ CONSTRUCTION FOR ENGINEER APPROVAL. CLEARING LIMITS SHALL MINIMIZE DISTURBANCE OF RIPARIAN VEGETATION.

© 2007 Herrera Environmental, Inc. All rights reserved.

ONE INCH
AT FULL SIZE, IF NOT ONE INCH SCALE ACCORDINGLY

No.	REVISION	BY	APP'D	DATE
6	REVISION NO. 6	MRM	MS	2/08
5	REVISION NO. 5	MRM	MS	12/07
4	REVISION NO. 4	MRM	MS	9/07
3	REVISION NO. 3	MRM	MS	8/07
2	REVISION NO. 2	MRM	MS	6/06
1	REVISION NO. 1	MRM	MS	5/06

HERRERA ENVIRONMENTAL CONSULTANTS
2200 Sixth Avenue
Suite 1100
Seattle, Washington
98121-1820
206-441-9080
206-441-9108 FAX
http://www.herreralnc.com

DESIGNED: G. KAYS
DRAWN: L. TURNIDGE
DESIGNED: -
DRAWN: -
DESIGNED: -
CHECKED: M. MERKELBACH
SCALE: AS NOTED
APPROVED: M. SPILLANE

SKAGIT ENVIRONMENTAL BANK
PHASE 1

ELJ #1-GRADE CONTROL STRUCTURE #1 PLAN

DATE: FEBRUARY 2008
PROJECT NO: 04-02822-003
DRAWING NO: C-6
SHEET NO: 10 OF 46

Path: O:\proj\04-02822-003\Cad\Dwgs\Phase 1-2-3 Rev 6\C-6.dwg
Plot Date: 3/5/2008 3:43 PM Cad User: Wojciech Wieszczeciński
Plot Style Table: Herrera.ctb Plotter: Adobe PDF

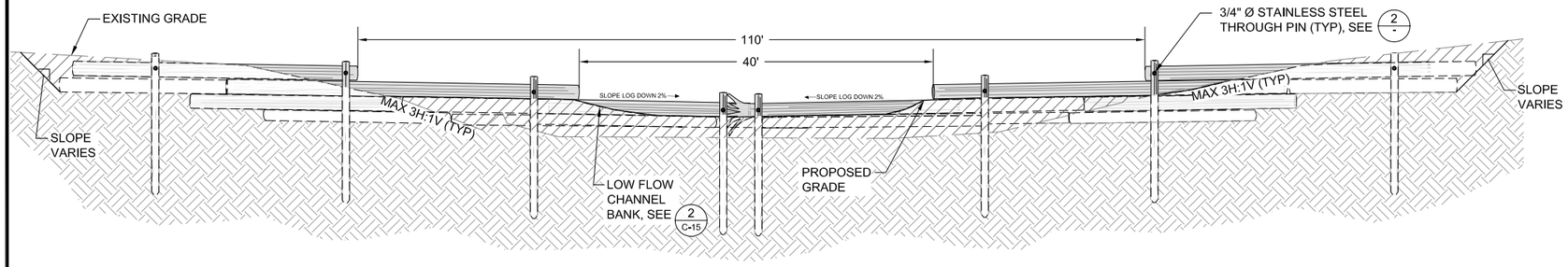

TYPICAL SECTION- INTERMEDIATE GRADE CONTROL STRUCTURE

SCALE: 1:10

C / C-6

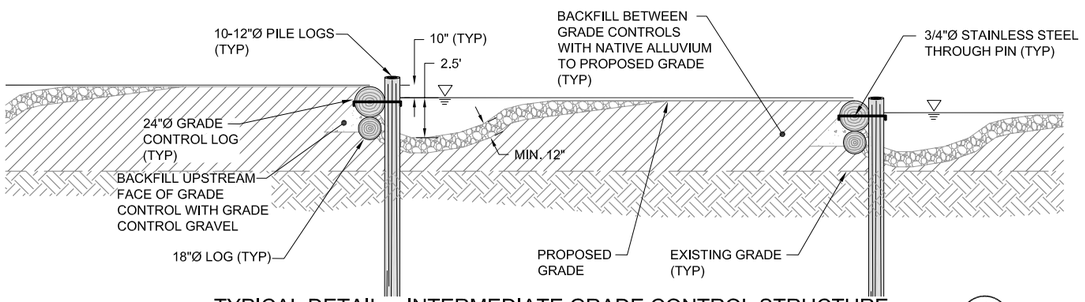

TYPICAL DETAIL - INTERMEDIATE GRADE CONTROL STRUCTURE

SCALE: 1:5

1 / C-6

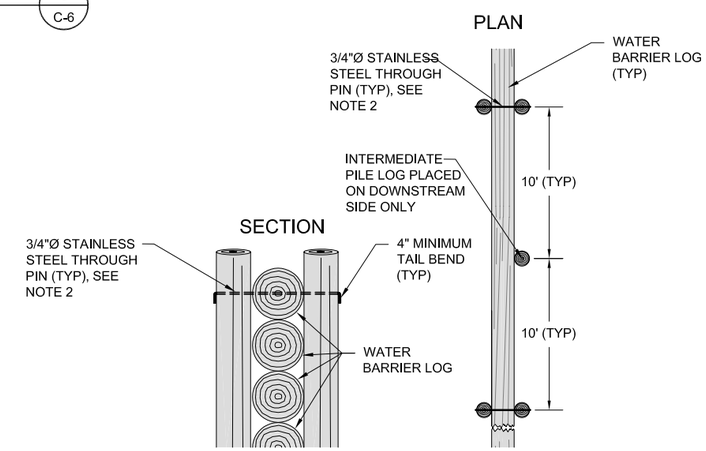

TYPICAL DETAIL - WATER BARRIER PILE PIN

SCALE: NTS

2 / -

LEGEND

- LOG SECTION
- GRADE CONTROL GRAVEL
- FISH GRAVEL
- EXISTING GROUND
- NATIVE ALLUVIUM FILL
- EXISTING GRADE

NOTES:

1. BACKFILL UPSTREAM FACE OF INTERMEDIATE GRADE CONTOURS WITH WELL GRADED GRADE CONTROL GRAVEL.
2. PIN EVERY PAIRED PILE LOG WITH A STAINLESS STEEL THROUGH PIN AS SHOWN THROUGH TOP LOG IN WATER BARRIER STRUCTURE.
3. MATCH EXISTING GRADE ABOVE LOW FLOW CHANNEL TO A MAXIMUM SLOPE OF 3 HORIZONTAL TO 1 VERTICAL.

FISH GRAVEL GRAIN SIZE DISTRIBUTION

U.S. STANDARD SIEVE SIZE	PERCENT PASSING BY WEIGHT
6 TO 9 INCH	100
3 TO 6 INCH	85
1-1/2 TO 3 INCH	70
3/4 TO 1-1/2 INCH	55
3/8 TO 3/4 INCH	40
0.1 TO 3/8 INCH	25
0.01 TO 0.1 INCH	10

GRADE CONTROL GRAVEL SIZE DISTRIBUTION

SCREEN SIZE	PERCENT PASSING BY WEIGHT
5 INCH	100
4 INCH	95-100
3 INCH	90-95
1-1/2 INCH	65-80
1-1/4 INCH	45-60
NO. 4	30-40
#200	15-20

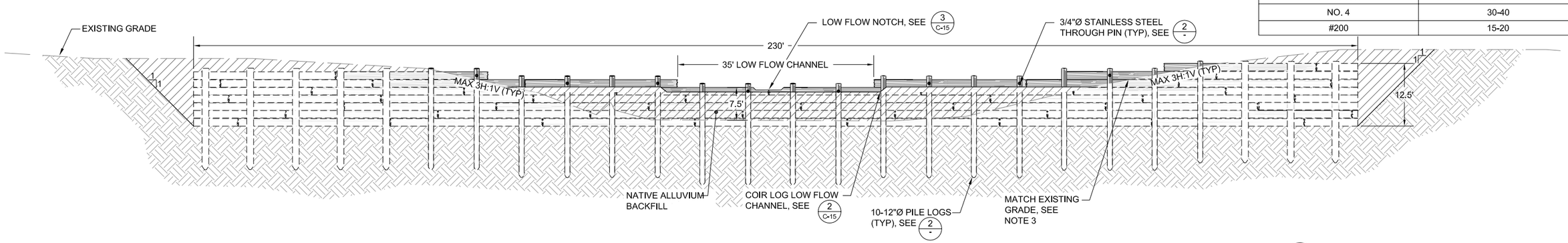

SECTION - WATER BARRIER STRUCTURE #1

SCALE: 1:10

B / C-6

ONE INCH
AT FULL SIZE, IF NOT ONE INCH SCALE ACCORDINGLY

© 2007 Herrera Environmental, Inc. All rights reserved.

Path: O:\proj\04-02822-003\Cad\Dwgs\Phase 1-2-3 Rev 6\C-7.dwg
Plot Date: 3/5/2008 3:44 PM Cad User: Wojciech Wieszczecinski
Plot Style Table: Herrera.ctb Plotter: Adobe PDF

No.	REVISION	BY	APP'D	DATE
6	REVISION NO. 6	MRM	MS	2/08
5	REVISION NO. 5	MRM	MS	12/07
4	REVISION NO. 4	MRM	MS	9/07
3	REVISION NO. 3	MRM	MS	8/07
2	REVISION NO. 2	MRM	MS	6/06
1	REVISION NO. 1	MRM	MS	5/06

HERRERA ENVIRONMENTAL CONSULTANTS
2200 Sixth Avenue
Suite 1100
Seattle, Washington
98121-1820
206-441-9080
206-441-9108 FAX
http://www.herreralnc.com

DESIGNED: G. KAYS | DRAWN: L. TURNIDGE
DESIGNED: - | DRAWN: -
DESIGNED: - | CHECKED: M. MERKELBACH
SCALE: AS NOTED | APPROVED: M. SPILLANE

SKAGIT ENVIRONMENTAL BANK
PHASE 1

ELJ #1 - PROFILE AND DETAILS

DATE: FEBRUARY 2008
PROJECT NO: 04-02822-003
DRAWING NO: C-7
SHEET NO: 11 OF 46

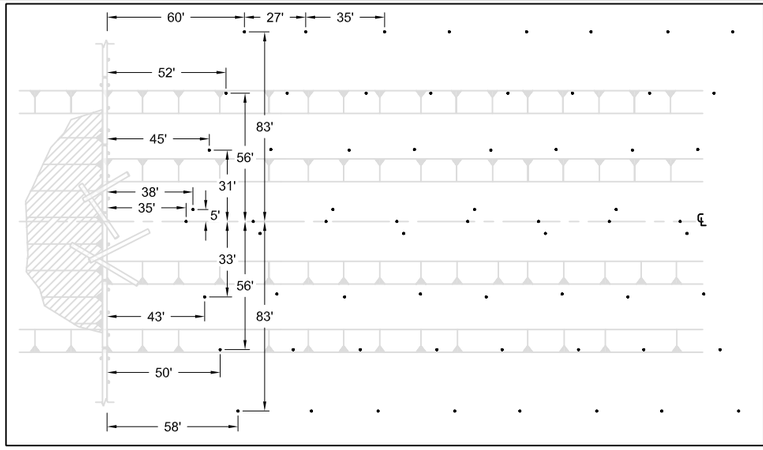

PILES

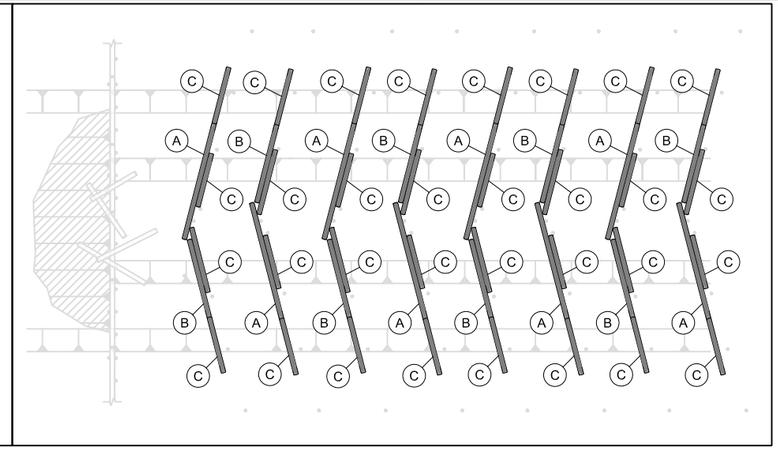

LAYER 1

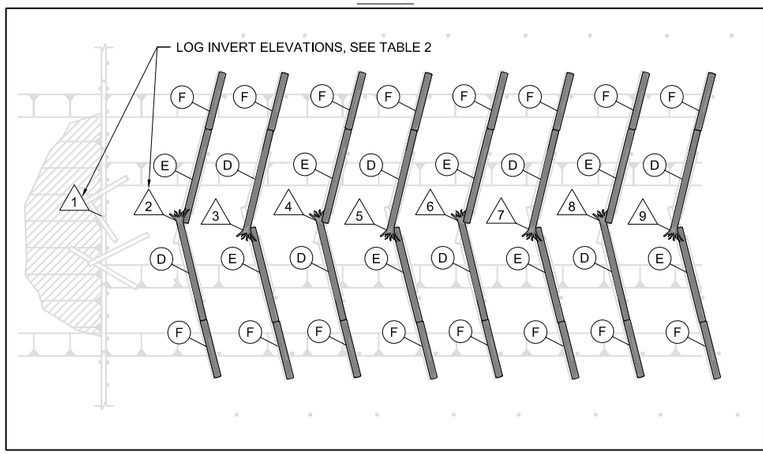

LAYER 2

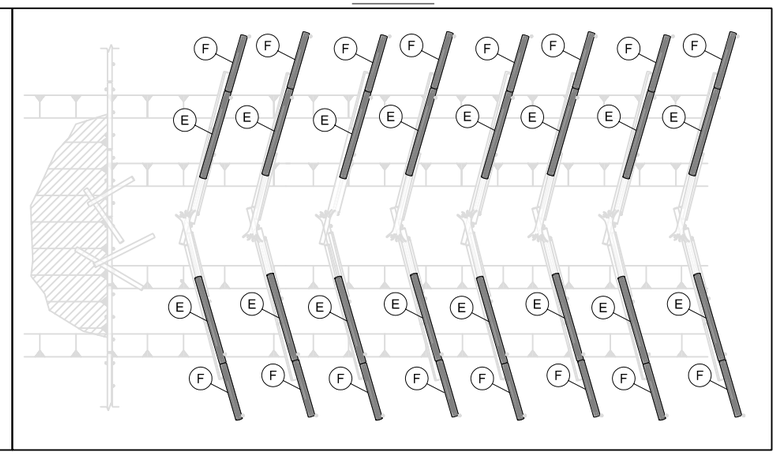

LAYER 3

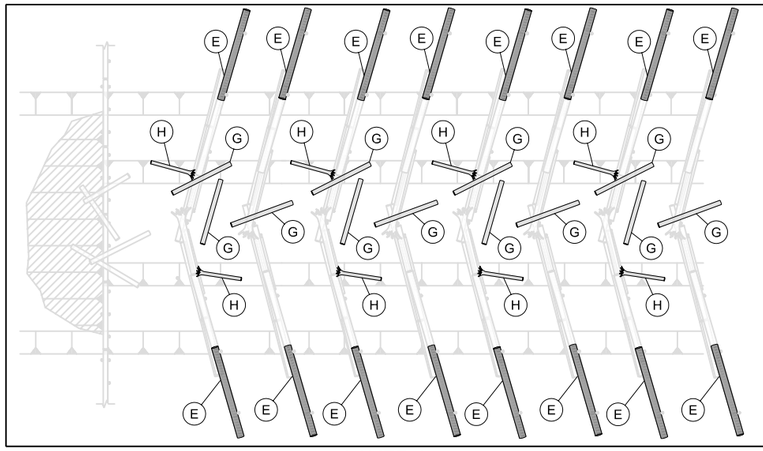

LAYER 4

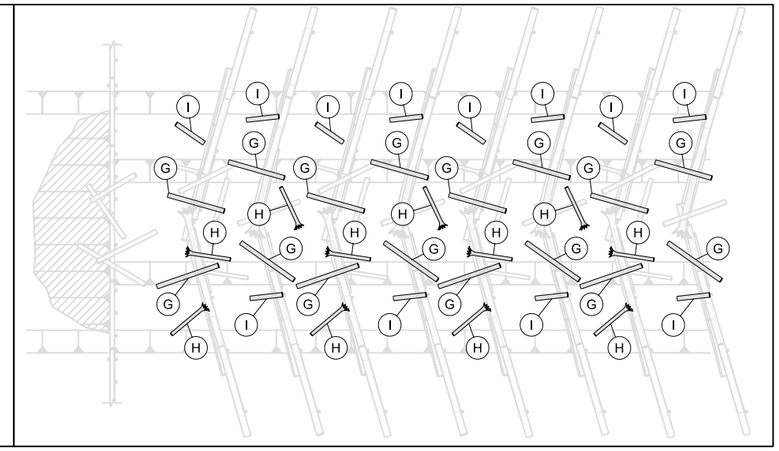

LAYER 5

LEGEND

- GRADE CONTROL LOGS
- HABITAT COMPLEXITY LOGS
- 10-12"Ø PILE

TABLE 1 - ELJ #1 LOG SCHEDULE:

LOG TYPE	DIAMETER	LENGTH	ROOTWAD	LOG COUNT
A	18"	50'		8
B	18"	35'		8
C	18"	25'		32
D	24"	50'	YES	8
E	24"	40'		40
F	24"	25'		32
G	12"+	25'-30'		28
H	12"+	15'-20'	YES	19
I	12"+	15'-20'		12
			TOTAL:	187

TABLE 2 - ELJ #1 LOG INVERT ELEVATIONS:

LOG INVERT #	INVERT EL FT (NAVD 88)
1	27'
2	26.2'
3	25.3'
4	24.5'
5	23.7'
6	22.8'
7	22.0'
8	21.2'
9	20.3'
DOWNSTREAM CHANNEL BED	19.5'

GRADE CONTROL LAYER SEQUENCE:

1. EXCAVATE TO GRADE FOR PLACEMENT OF LOG LAYER 1.
2. PLACE LOG LAYER 1 SUCH THAT PLACEMENT OF LOG LAYER 2 WILL MEET DESIGNED INVERT HEIGHTS.
3. EXCAVATE PLUNGE POOL AND BACKFILL UPSTREAM FACE OF GRADE CONTROL LOGS AND PLUNGE POOL WITH FISH GRAVEL.
4. LOCALLY EXCAVATE AND PLACE HABITAT COMPLEXITY LOG LAYER 4 AND 5.
5. BACKFILL STRUCTURES WITH NATIVE ALLUVIUM.

© 2007 Herrera Environmental, Inc. All rights reserved.

ONE INCH
AT FULL SIZE, IF NOT ONE INCH SCALE ACCORDINGLY

No.	REVISION	BY	APP'D	DATE
6	REVISION NO. 6	MRM	MS	2/08
5	REVISION NO. 5	MRM	MS	12/07
4	REVISION NO. 4	MRM	MS	9/07
3	REVISION NO. 3	MRM	MS	8/07
2	REVISION NO. 2	MRM	MS	6/06
1	REVISION NO. 1	MRM	MS	5/06

HERRERA ENVIRONMENTAL CONSULTANTS
2200 Sixth Avenue
Suite 1100
Seattle, Washington
98121-1820
206-441-9080
206-441-9108 FAX
http://www.herreralnc.com

DESIGNED: G. KAYS
DRAWN: L. TURNIDGE
DESIGNED: -
DRAWN: -
DESIGNED: -
CHECKED: M. MERKELBACH
SCALE: AS NOTED
APPROVED: M. SPILLANE

SKAGIT ENVIRONMENTAL BANK
PHASE 1

ELJ #1 - LAYERING PLAN

DATE: FEBRUARY 2008
PROJECT NO: 04-02822-003
DRAWING NO: C-8
SHEET NO: 12 OF 46

Path: O:\proj\04-02822-003\Cad\Dwgs\Phase 1-2-3 Rev 6\C-8.dwg
Plot Date: 3/5/2008 3:45 PM
Plot Style Table: Herrera.ctb
Cad User: Wojciech Wieszczeciński
Plotter: Adobe PDF

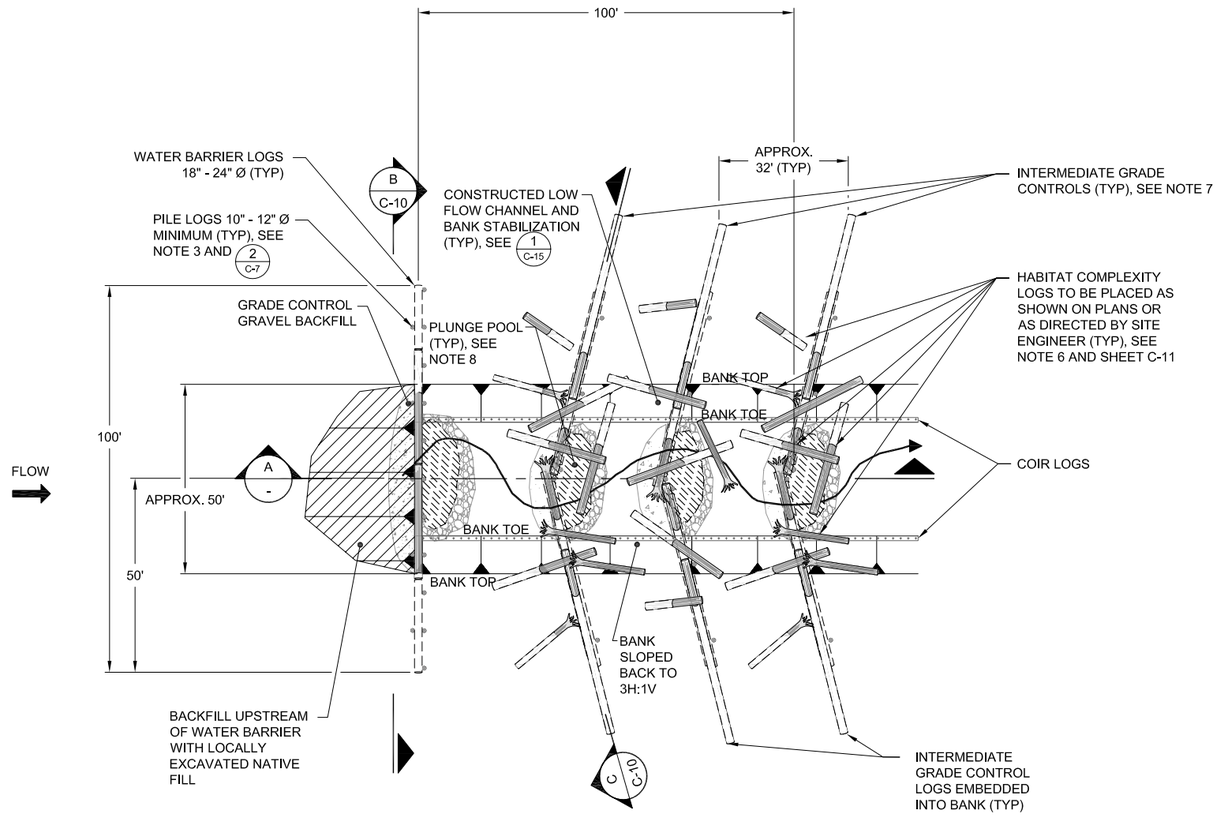

PLAN VIEW - GRADE CONTROL STRUCTURE #2

SCALE: NOTED

1 / C-1

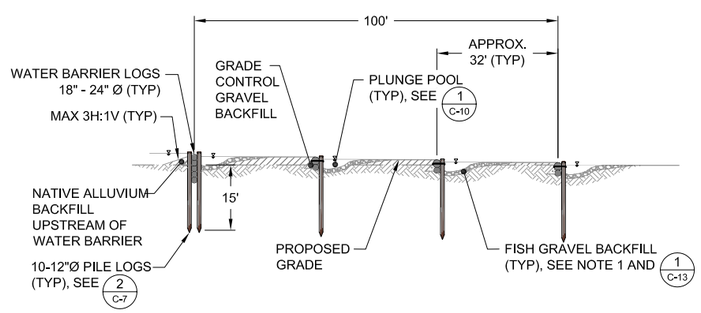

PROFILE - GRADE CONTROL STRUCTURE #2

SCALE: NOTED

A -

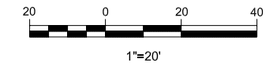

LEGEND

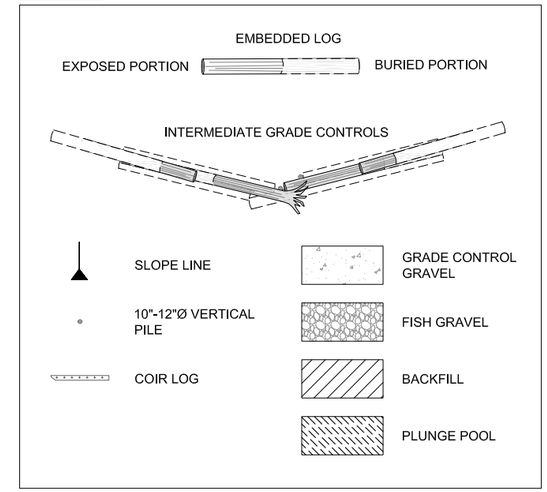

ELJ CONSTRUCTION NOTES:

1. PRIOR TO ELJ CONSTRUCTION INSTALL WATER MANAGEMENT AND TESC BMPS. SEE DRAWINGS ESC-1 AND ESC-2.
2. SHAPE CONSTRUCTED CREEK CHANNEL SLOPE TO ACHIEVE MAXIMUM 3H:1V BANK SLOPE AND INSTALL BANK STABILIZATION, AS SHOWN ON SHEET C-15.
3. PILE LOGS SHALL BE DRIVEN USING HYDRAULIC STATIC LOADING OR VIBRATORY PUSH TECHNOLOGY. NO IMPACT HAMMERS SHALL BE USED.
4. CONSTRUCT LOW FLOW CHANNEL AND GRADE CONTROL STRUCTURES SUCH THAT THERE ARE NO VERTICAL DROPS GREATER THAN 0.8 FEET.
5. ALL LOGS SHALL BE UNTREATED FIR.
6. HABITAT COMPLEXITY LOG G EMBEDMENT LENGTH MINIMUM OF 1/2 LOG LENGTH AND AN AVERAGE DEPTH OF 3 FEET. HABITAT COMPLEXITY LOGS H AND I EMBEDDED OVER 2/3 THE LOG LENGTH AND AN AVERAGE OF 2 FEET.
7. INTERMEDIATE GRADE CONTROLS MIRRORED EVERY OTHER.
8. PLUNGE POOLS SHALL BE OVER EXCAVATED AND BACKFILLED WITH FISH GRAVEL TO A MINIMUM THICKNESS OF 1', SEE SHEET C-7 FOR GRAIN SIZE DISTRIBUTION.
9. HABITAT COMPLEXITY LOGS SHALL INCLUDE ALL LOGS NOT INCLUDED IN EITHER THE INTERMEDIATE GRADE CONTROL STRUCTURES OR THE WATER BARRIER STRUCTURE. THE LOGS ARE DESIGNED TO ADD HYDRAULIC COMPLEXITY TO THE CHANNEL. FINAL LOCATIONS MAY BE ALTERED IN THE FIELD DURING CONSTRUCTION BY SITE ENGINEER.
10. ABANDON DIVERSION CHANNEL AFTER COMPLETION OF CONSTRUCTION.
11. ALL STREAM BANKS DISTURBED DURING CONSTRUCTION SHALL BE REVEGETATED WITH NATIVE RIPARIAN VEGETATION. SEE C-21.
12. ELJ CONSTRUCTION AND DISTURBANCE LIMITS SHALL BE STAKED BY CONTRACTOR A MINIMUM OF 2 WORKING DAYS PRIOR TO COMMENCEMENT OF ELJ CONSTRUCTION FOR ENGINEER APPROVAL. CLEARING LIMITS SHALL MINIMIZE DISTURBANCE OF RIPARIAN VEGETATION.

© 2007 Herrera Environmental, Inc. All rights reserved.

ONE INCH
AT FULL SIZE, IF NOT ONE INCH SCALE ACCORDINGLY

No.	REVISION	BY	APP'D	DATE
6	REVISION NO. 6	MRM	MS	2/08
5	REVISION NO. 5	MRM	MS	12/07
4	REVISION NO. 4	MRM	MS	9/07
3	REVISION NO. 3	MRM	MS	8/07
2	REVISION NO. 2	MRM	MS	6/06
1	REVISION NO. 1	MRM	MS	5/06

HERRERA ENVIRONMENTAL CONSULTANTS
2200 Sixth Avenue
Suite 1100
Seattle, Washington
98121-1820
206-441-9080
206-441-9108 FAX
http://www.herreralnc.com

DESIGNED: G. KAYS
DRAWN: L. TURNIDGE
DESIGNED: -
DRAWN: -
DESIGNED: -
CHECKED: M. MERKELBACH
SCALE: AS NOTED
APPROVED: M. SPILLANE

SKAGIT ENVIRONMENTAL BANK
PHASE 1

ELJ #2-GRADE CONTROL STRUCTURE #2 PLAN

DATE: FEBRUARY 2008
PROJECT NO: 04-02822-003
DRAWING NO: C-9
SHEET NO: 13 OF 46

Path: O:\proj\04-02822-003\Cad\Dwgs\Phase 1-2-3 Rev 6\C-9.dwg
Plot Date: 3/5/2008 3:45 PM Cad User: Wojciech Wieszczeciński
Plot Style Table: Herrera.ctb Plotter: Adobe PDF

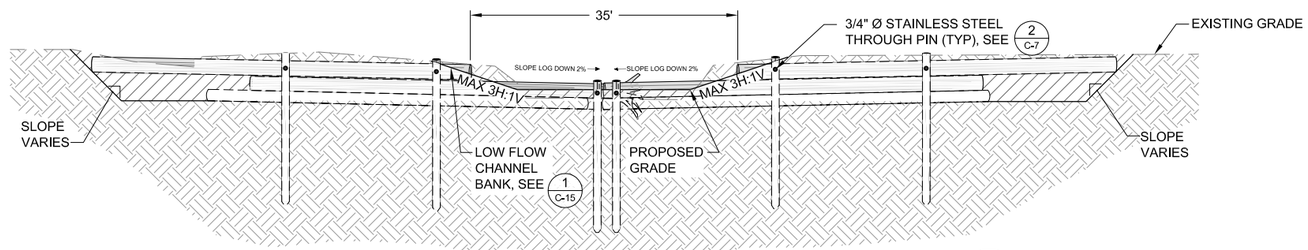

TYPICAL SECTION- INTERMEDIATE GRADE CONTROL STRUCTURE

SCALE: 1:10

C / C-9

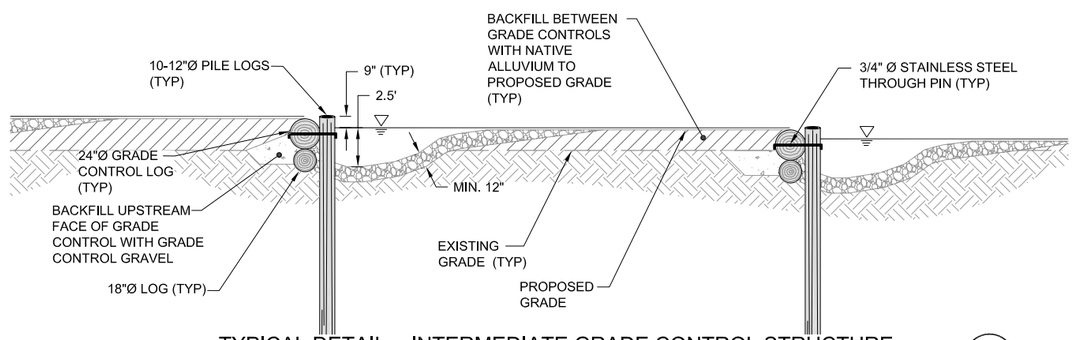

TYPICAL DETAIL - INTERMEDIATE GRADE CONTROL STRUCTURE

SCALE: 1:5

1 / C-9

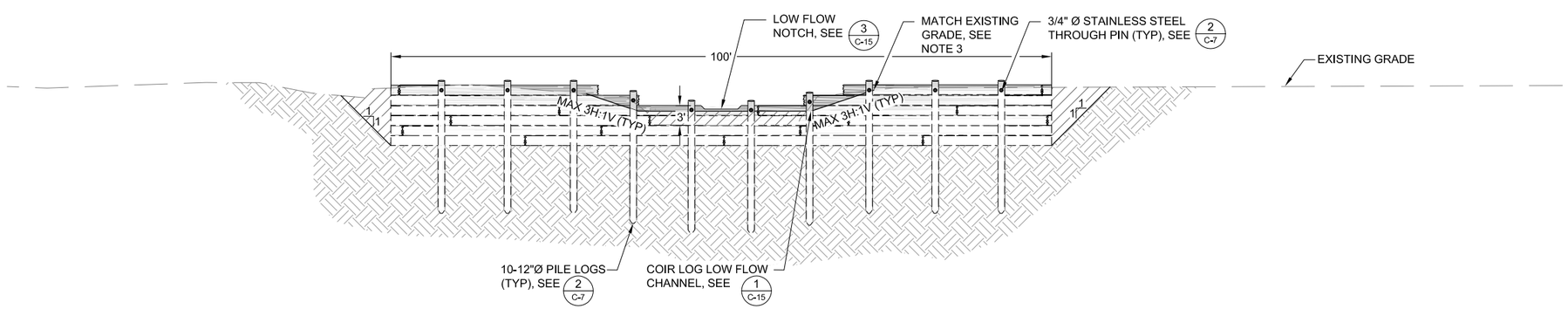

SECTION - WATER BARRIER STRUCTURE

SCALE: 1:10

B / C-9

LEGEND

- LOG SECTION
- GRADE CONTROL GRAVEL
- FISH GRAVEL
- EXISTING GROUND
- NATIVE ALLUVIUM FILL
- EXISTING GRADE

NOTES:

1. BACKFILL UPSTREAM FACE OF INTERMEDIATE GRADE CONTOURS WITH GRADE CONTROL GRAVEL.
2. PIN EVERY PAIRED PILE LOG WITH A STAINLESS STEEL THROUGH PIN AS SHOWN THROUGH TOP LOG IN WATER BARRIER STRUCTURE.
3. MATCH EXISTING GRADE ABOVE LOW FLOW CHANNEL TO A MAXIMUM SLOPE OF 3 HORIZONTAL TO 1 VERTICAL.

© 2007 Herrera Environmental, Inc. All rights reserved.

ONE INCH
AT FULL SIZE IF NOT ONE INCH SCALE ACCORDINGLY

No.	REVISION	BY	APP'D	DATE
6	REVISION NO. 6	MRM	MS	2/08
5	REVISION NO. 5	MRM	MS	12/07
4	REVISION NO. 4	MRM	MS	9/07
3	REVISION NO. 3	MRM	MS	8/07
2	REVISION NO. 2	MRM	MS	6/06
1	REVISION NO. 1	MRM	MS	5/06

HERRERA ENVIRONMENTAL CONSULTANTS
2200 Sixth Avenue
Suite 1100
Seattle, Washington
98121-1820
206-441-9080
206-441-9108 FAX
http://www.herreralnc.com

DESIGNED: G. KAYS
DRAWN: L. TURNIDGE
DESIGNED: -
DRAWN: -
DESIGNED: -
CHECKED: M. MERKELBACH
SCALE: AS NOTED
APPROVED: M. SPILLANE

SKAGIT ENVIRONMENTAL BANK
PHASE 1

ELJ #2 - PROFILE AND DETAILS

DATE: FEBRUARY 2008
PROJECT NO: 04-02822-003
DRAWING NO: C-10
SHEET NO: 14 OF 46

Path: O:\proj\04-02822-003\Cad\Dwgs\Phase 1-2-3 Rev 6\C-10.dwg
Plot Date: 3/5/2008 3:46 PM Cad User: Wojciech Wieszczecinski
Plot Style Table: Herrera.ctb Plotter: Adobe PDF

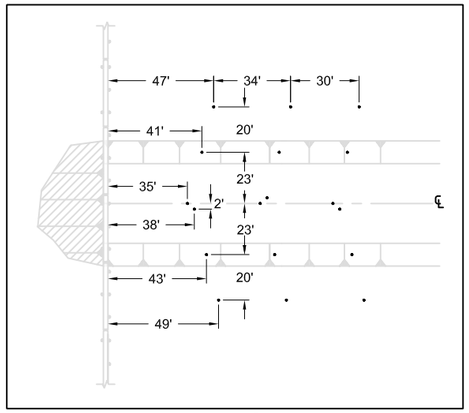

PILES

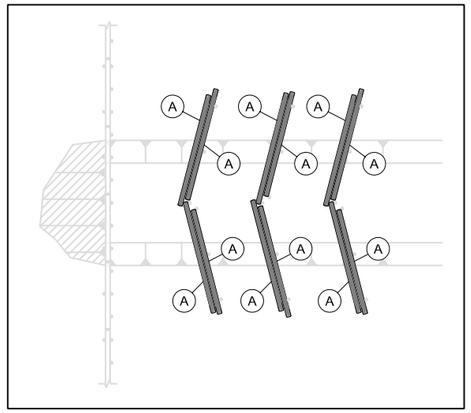

LAYER 1

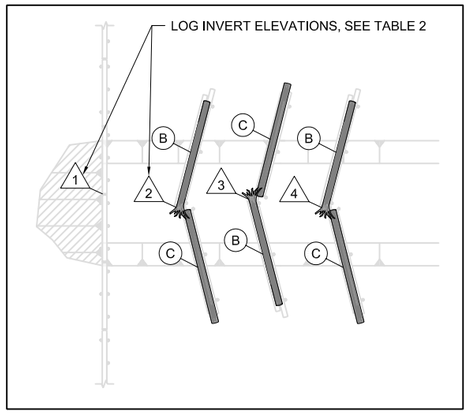

LAYER 2

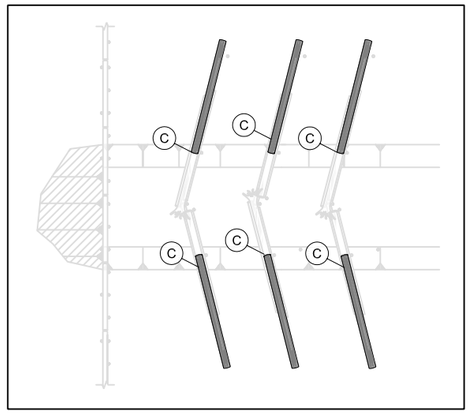

LAYER 3

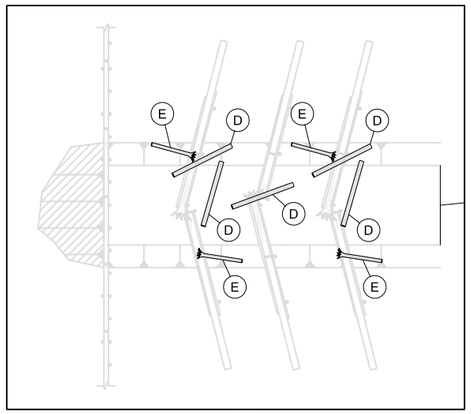

LAYER 4

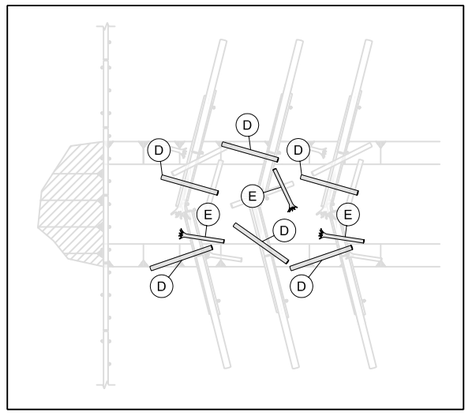

LAYER 5

LEGEND

- GRADE CONTROL LOGS
- HABITAT COMPLEXITY LOGS
- 10-12"Ø PILE

TABLE 1 - ELJ #2 LOG SCHEDULE:

LOG TYPE	DIAMETER	LENGTH	ROOTWAD	LOG COUNT
A	18"	50'		12
B	24"	50'	YES	3
C	24"	50'		9
D	12"+	25'-30'		11
E	12"+	15'-20'	YES	7
			TOTAL:	42

TABLE 2 - ELJ #2 LOG INVERT ELEVATIONS:

LOG INVERT #	INVERT EL FT (NAVD 88)
1	25.2'
2	24.5'
3	23.7'
4	23.0'
DOWNSTREAM CHANNEL BED	22.2'

GRADE CONTROL LAYER SEQUENCE:

1. EXCAVATE TO GRADE FOR PLACEMENT OF LOG LAYER 1.
2. PLACE LOG LAYER 1 SUCH THAT PLACEMENT OF LOG LAYER 2 WILL MEET DESIGNED INVERT HEIGHTS.
3. EXCAVATE PLUNGE POOL AND BACKFILL UPSTREAM FACE OF GRADE CONTROL LOGS AND PLUNGE POOL WITH FISH GRAVEL.
4. LOCALLY EXCAVATE AND PLACE HABITAT COMPLEXITY LOG LAYER 4 AND 5.
5. BACKFILL STRUCTURES WITH NATIVE ALLUVIUM.

© 2007 Herrera Environmental, Inc. All rights reserved.

ONE INCH
AT FULL SIZE, IF NOT ONE INCH SCALE ACCORDINGLY

No.	REVISION	BY	APP'D	DATE
6	REVISION NO. 6	MRM	MS	2/08
5	REVISION NO. 5	MRM	MS	12/07
4	REVISION NO. 4	MRM	MS	9/07
3	REVISION NO. 3	MRM	MS	8/07
2	REVISION NO. 2	MRM	MS	6/06
1	REVISION NO. 1	MRM	MS	5/06

HERRERA ENVIRONMENTAL CONSULTANTS
2200 Sixth Avenue
Suite 1100
Seattle, Washington
98121-1820
206-441-9080
206-441-9108 FAX
http://www.herreralnc.com

DESIGNED: G. KAYS
DRAWN: L. TURNIDGE
DESIGNED: -
DRAWN: -
DESIGNED: -
CHECKED: M. MERKELBACH
SCALE: AS NOTED
APPROVED: M. SPILLANE

SKAGIT ENVIRONMENTAL BANK
PHASE 1

ELJ #2 - LAYERING PLAN

DATE: FEBRUARY 2008
PROJECT NO: 04-02822-003
DRAWING NO: C-11
SHEET NO: 15 OF 46

Path: O:\proj\04-02822-003\Cad\Dwgs\Phase 1-2-3 Rev 6\C-11.dwg
Plot Date: 3/5/2008 3:47 PM Cad User: Wojciech Wieszczecinski
Plot Style Table: Herrera.ctb Plotter: Adobe PDF

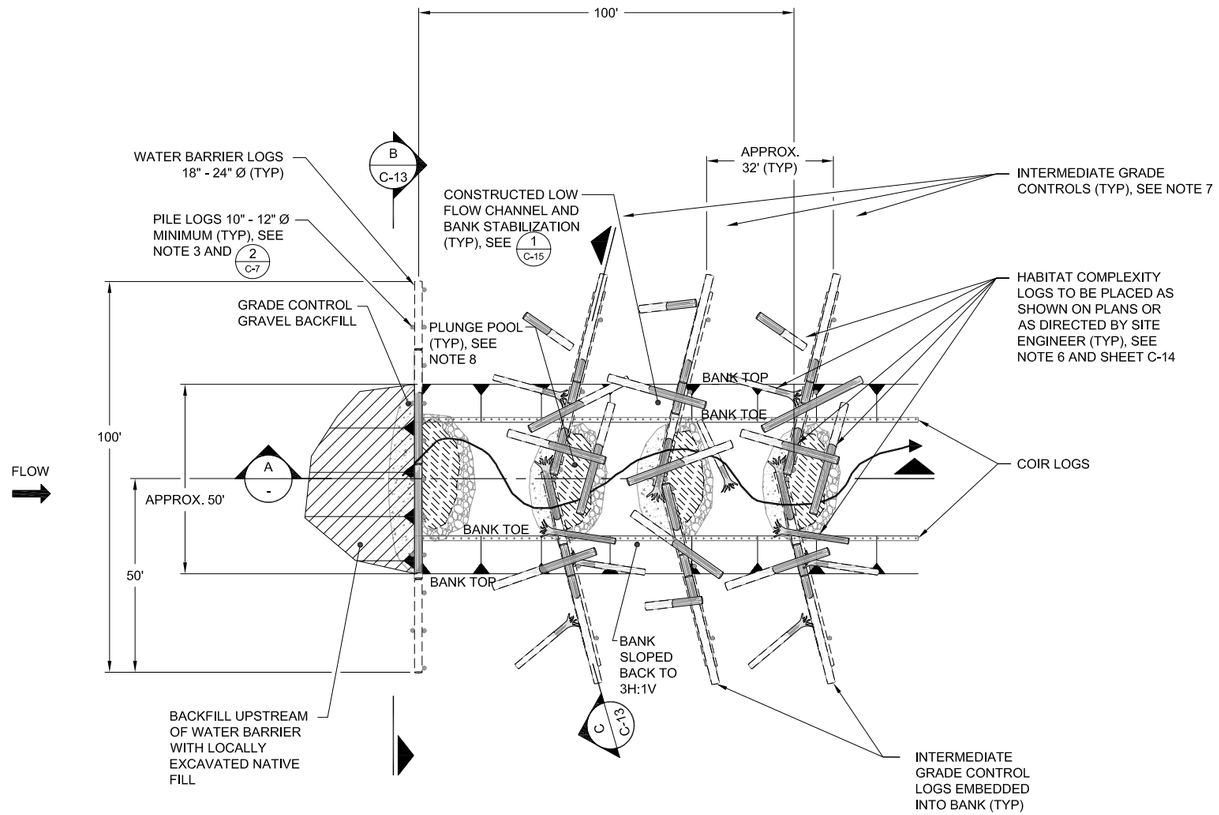

PLAN VIEW - GRADE CONTROL STRUCTURE #3

SCALE: NOTED

1 / C-1

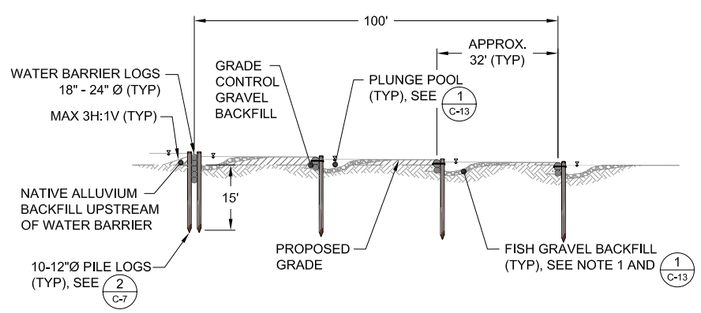

PROFILE - GRADE CONTROL STRUCTURE #3

SCALE: NOTED

A -

20 0 20 40

1"=20'

LEGEND

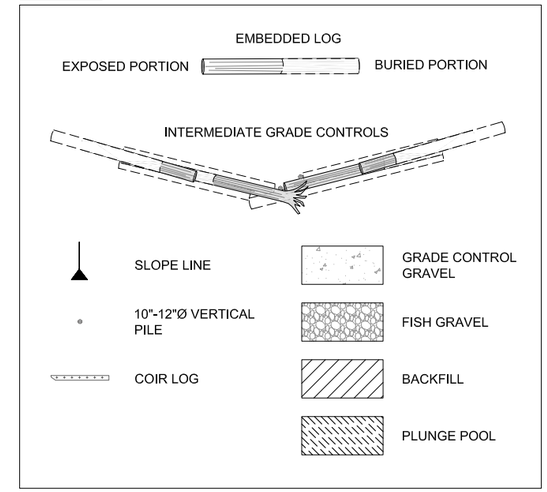

ELJ CONSTRUCTION NOTES:

1. PRIOR TO ELJ CONSTRUCTION INSTALL WATER MANAGEMENT AND TESC BMPS. SEE DRAWINGS ESC-1 AND ESC-2.
2. SHAPE CONSTRUCTED CREEK CHANNEL SLOPE TO ACHIEVE MAXIMUM 3H:1V BANK SLOPE AND INSTALL BANK STABILIZATION, AS SHOWN ON SHEET C-15.
3. PILE LOGS SHALL BE DRIVEN USING HYDRAULIC STATIC LOADING OR VIBRATORY PUSH TECHNOLOGY. NO IMPACT HAMMERS SHALL BE USED.
4. CONSTRUCT LOW FLOW CHANNEL AND GRADE CONTROL STRUCTURES SUCH THAT THERE ARE NO VERTICAL DROPS GREATER THAN 0.8 FEET.
5. ALL LOGS SHALL BE UNTREATED FIR.
6. HABITAT COMPLEXITY LOG G EMBEDMENT LENGTH MINIMUM OF 1/2 LOG LENGTH AND AN AVERAGE DEPTH OF 3 FEET. HABITAT COMPLEXITY LOGS H AND I EMBEDDED OVER 2/3 THE LOG LENGTH AND AN AVERAGE OF 2 FEET.
7. INTERMEDIATE GRADE CONTROLS MIRRORED EVERY OTHER.
8. PLUNGE POOLS SHALL BE OVER EXCAVATED AND BACKFILLED WITH FISH GRAVEL TO A MINIMUM THICKNESS OF 1', SEE SHEET C-7 FOR GRAIN SIZE DISTRIBUTION.
9. HABITAT COMPLEXITY LOGS SHALL INCLUDE ALL LOGS NOT INCLUDED IN EITHER THE INTERMEDIATE GRADE CONTROL STRUCTURES OR THE WATER BARRIER STRUCTURE. THE LOGS ARE DESIGNED TO ADD HYDRAULIC COMPLEXITY TO THE CHANNEL. FINAL LOCATIONS MAY BE ALTERED IN THE FIELD DURING CONSTRUCTION BY SITE ENGINEER.
10. ABANDON DIVERSION CHANNEL AFTER COMPLETION OF CONSTRUCTION.
11. ALL STREAM BANKS DISTURBED DURING CONSTRUCTION SHALL BE REVEGETATED WITH NATIVE RIPARIAN VEGETATION. SEE C-21.
12. ELJ CONSTRUCTION AND DISTURBANCE LIMITS SHALL BE STAKED BY CONTRACTOR A MINIMUM OF 2 WORKING DAYS PRIOR TO COMMENCEMENT OF ELJ CONSTRUCTION FOR ENGINEER APPROVAL. CLEARING LIMITS SHALL MINIMIZE DISTURBANCE OF RIPARIAN VEGETATION.

© 2007 Herrera Environmental, Inc. All rights reserved.

ONE INCH
AT FULL SIZE, IF NOT ONE INCH SCALE ACCORDINGLY

No.	REVISION	BY	APP'D	DATE
6	REVISION NO. 6	MRM	MS	2/08
5	REVISION NO. 5	MRM	MS	12/07
4	REVISION NO. 4	MRM	MS	9/07
3	REVISION NO. 3	MRM	MS	8/07
2	REVISION NO. 2	MRM	MS	6/06
1	REVISION NO. 1	MRM	MS	5/06

HERRERA ENVIRONMENTAL CONSULTANTS
2200 Sixth Avenue
Suite 1100
Seattle, Washington
98121-1820
206-441-9080
206-441-9108 FAX
http://www.herreralnc.com

DESIGNED: G. KAYS
DRAWN: L. TURNIDGE
DESIGNED: -
DRAWN: -
DESIGNED: -
CHECKED: M. MERKELBACH
SCALE: AS NOTED
APPROVED: M. SPILLANE

SKAGIT ENVIRONMENTAL BANK
PHASE 1

ELJ #3-GRADE CONTROL STRUCTURE #3 PLAN

DATE: FEBRUARY 2008
PROJECT NO: 04-02822-003
DRAWING NO: C-12
SHEET NO: 16 OF 46

Path: O:\proj\04-02822-003\Cad\Dwgs\Phase 1-2-3 Rev 6\C-12.dwg
Plot Date: 3/5/2008 3:47 PM Cad User: Wojciech Wieszczeciński
Plot Style Table: Herrera.ctb Plotter: Adobe PDF

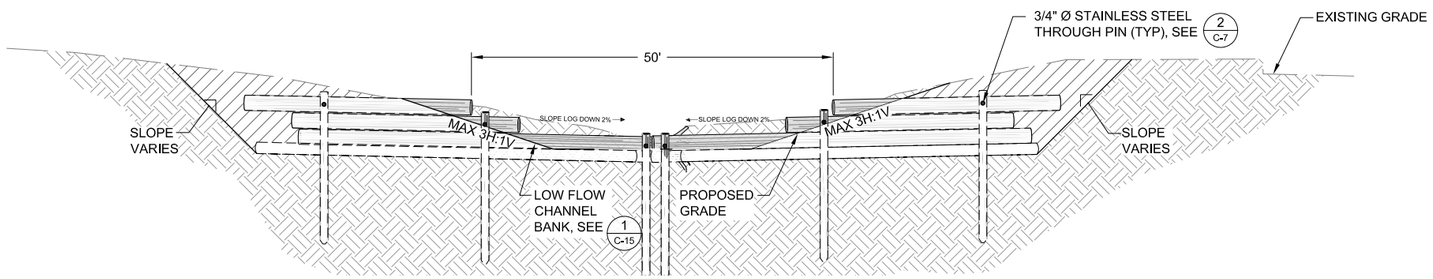

TYPICAL SECTION- INTERMEDIATE GRADE CONTROL STRUCTURE

SCALE: 1:10

C / C-12

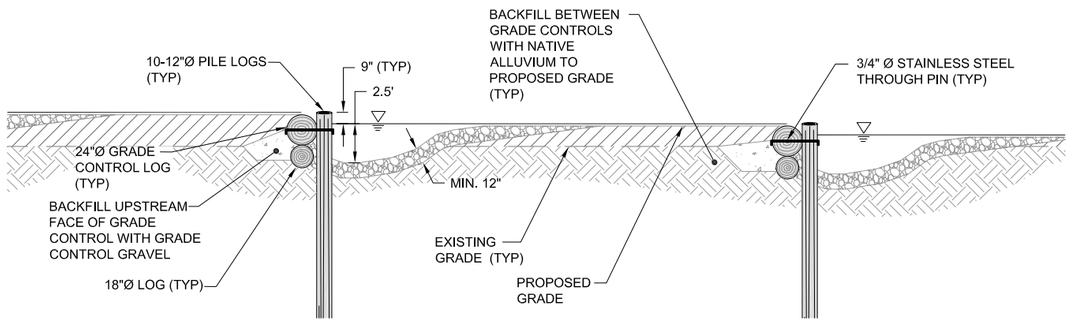

TYPICAL DETAIL - INTERMEDIATE GRADE CONTROL STRUCTURE

SCALE: 1:5

1 / C-12

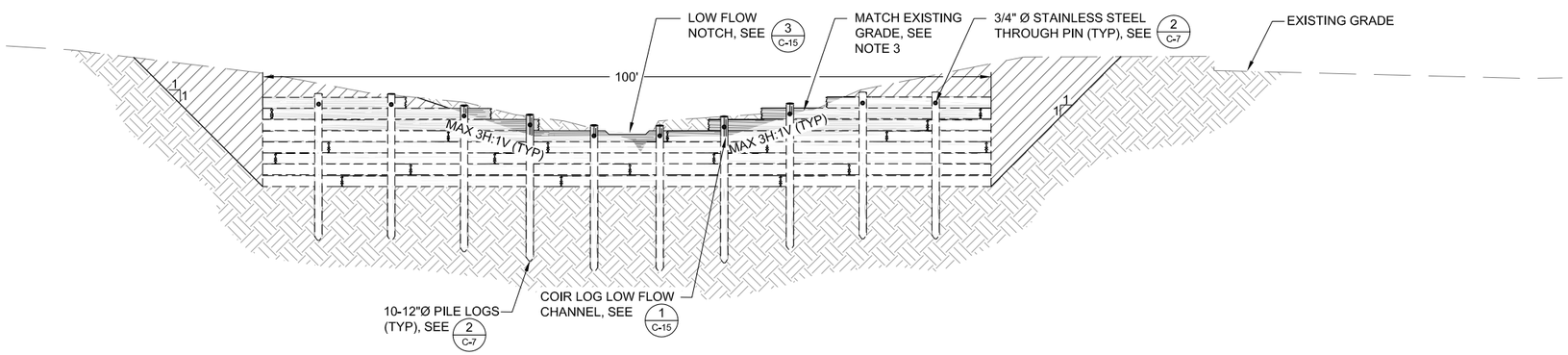

SECTION - WATER BARRIER STRUCTURE

SCALE: 1:10

B / C-12

LEGEND

- LOG SECTION
- GRADE CONTROL GRAVEL
- FISH GRAVEL
- EXISTING GROUND
- NATIVE ALLUVIUM FILL
- EXISTING GRADE

NOTES:

1. BACKFILL UPSTREAM FACE OF INTERMEDIATE GRADE CONTOURS WITH WELL GRADED GRADE CONTROL GRAVEL.
2. PIN EVERY PAIRED PILE LOG WITH A STAINLESS STEEL THROUGH PIN AS SHOWN THROUGH TOP LOG IN WATER BARRIER STRUCTURE.
3. MATCH EXISTING GRADE ABOVE LOW FLOW CHANNEL TO A MAXIMUM SLOPE OF 3 HORIZONTAL TO 1 VERTICAL.

© 2007 Herrera Environmental Inc. All rights reserved.

ONE INCH
AT FULL SIZE, IF NOT ONE INCH SCALE ACCORDINGLY

No.	REVISION	BY	APP'D	DATE
6	REVISION NO. 6	MRM	MS	2/08
5	REVISION NO. 5	MRM	MS	12/07
4	REVISION NO. 4	MRM	MS	9/07
3	REVISION NO. 3	MRM	MS	8/07
2	REVISION NO. 2	MRM	MS	6/06
1	REVISION NO. 1	MRM	MS	5/06

HERRERA ENVIRONMENTAL CONSULTANTS
2200 Sixth Avenue
Suite 1100
Seattle, Washington
98121-1820
206-441-9080
206-441-9108 FAX
http://www.herreralnc.com

DESIGNED: G. KAYS
DRAWN: L. TURNIDGE
DESIGNED: -
DRAWN: -
DESIGNED: -
CHECKED: M. MERKELBACH
SCALE: AS NOTED
APPROVED: M. SPILLANE

SKAGIT ENVIRONMENTAL BANK
PHASE 1

ELJ #3 - PROFILE AND DETAILS

DATE: FEBRUARY 2008
PROJECT NO: 04-02822-003
DRAWING NO: C-13
SHEET NO: 17 OF 46

Path: O:\proj\04-02822-003\Cad\Dwgs\Phase 1-2-3 Rev 6\C-13.dwg
Plot Date: 3/5/2008 3:48 PM Cad User: Wojciech Wieszczecinski
Plot Style Table: Herrera.ctb Plotter: Adobe PDF

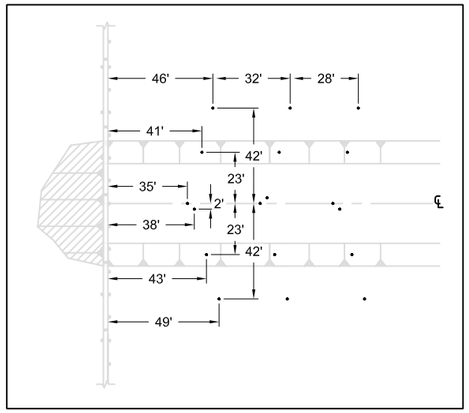

PILES

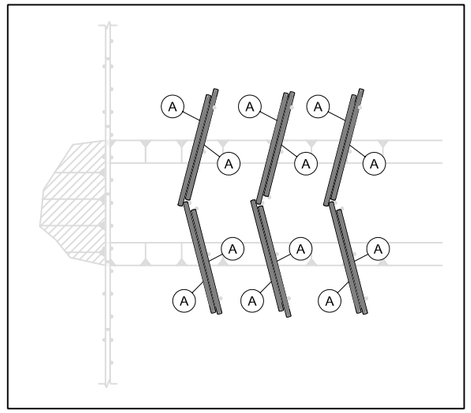

LAYER 1

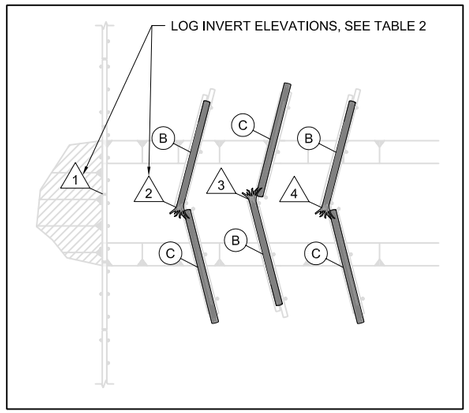

LAYER 2

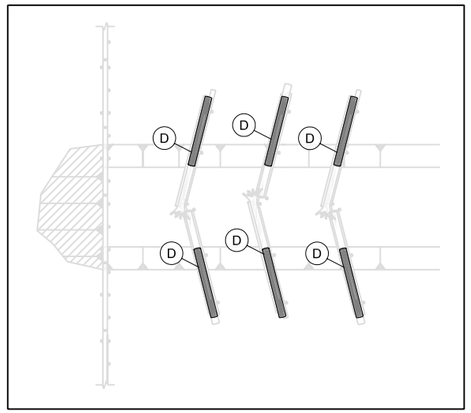

LAYER 3

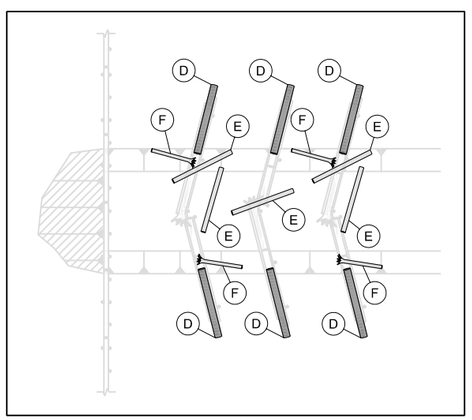

LAYER 4

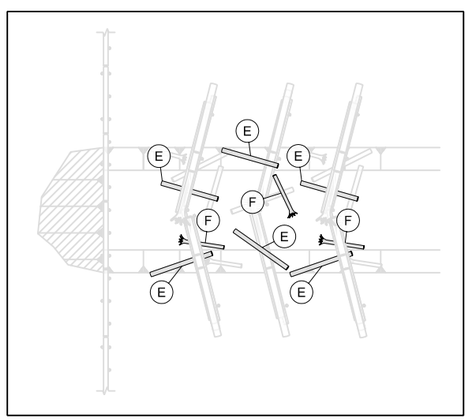

LAYER 5

LEGEND

- GRADE CONTROL LOGS
- HABITAT COMPLEXITY LOGS
- 10-12"Ø PILE

TABLE 1 - ELJ #3 LOG SCHEDULE:

LOG TYPE	DIAMETER	LENGTH	ROOTWAD	LOG COUNT
A	18"	50'		12
B	24"	50'	YES	3
C	24"	50'		3
D	24"	30'		12
E	12"+	25'-30'		11
F	12"+	15'-20'	YES	7
			TOTAL:	48

TABLE 2 - ELJ #3 LOG INVERT ELEVATIONS:

LOG INVERT #	INVERT EL FT (NAVD 88)
1	24.0'
2	23.3'
3	22.5'
4	21.8'
DOWNSTREAM CHANNEL BED	21.1'

GRADE CONTROL LAYER SEQUENCE:

1. EXCAVATE TO GRADE FOR PLACEMENT OF LOG LAYER 1.
2. PLACE LOG LAYER 1 SUCH THAT PLACEMENT OF LOG LAYER 2 WILL MEET DESIGNED INVERT HEIGHTS.
3. EXCAVATE PLUNGE POOL AND BACKFILL UPSTREAM FACE OF GRADE CONTROL LOGS AND PLUNGE POOL WITH FISH GRAVEL.
4. LOCALLY EXCAVATE AND PLACE HABITAT COMPLEXITY LOG LAYER 4 AND 5.
5. BACKFILL STRUCTURES WITH NATIVE ALLUVIUM.

© 2007 Herrera Environmental, Inc. All rights reserved.

ONE INCH
AT FULL SIZE, IF NOT ONE INCH SCALE ACCORDINGLY

No.	REVISION	BY	APP'D	DATE
6	REVISION NO. 6	MRM	MS	2/08
5	REVISION NO. 5	MRM	MS	12/07
4	REVISION NO. 4	MRM	MS	9/07
3	REVISION NO. 3	MRM	MS	8/07
2	REVISION NO. 2	MRM	MS	6/06
1	REVISION NO. 1	MRM	MS	5/06

HERRERA ENVIRONMENTAL CONSULTANTS
2200 Sixth Avenue
Suite 1100
Seattle, Washington
98121-1820
206-441-9080
206-441-9108 FAX
http://www.herreralnc.com

DESIGNED: G. KAYS
DRAWN: L. TURNIDGE
DESIGNED: -
DRAWN: -
DESIGNED: -
CHECKED: M. MERKELBACH
SCALE: AS NOTED
APPROVED: M. SPILLANE

SKAGIT ENVIRONMENTAL BANK
PHASE 1

ELJ #3 - LAYERING PLAN

DATE: FEBRUARY 2008
PROJECT NO: 04-02822-003
DRAWING NO: C-14
SHEET NO: 18 OF 46

Path: O:\proj\04-02822-003\Cad\Dwgs\Phase 1-2-3 Rev 6\C-14.dwg
Plot Date: 3/5/2008 3:48 PM Cad User: Wojciech Wieszczecinski
Plot Style Table: Herrera.ctb Plotter: Adobe PDF

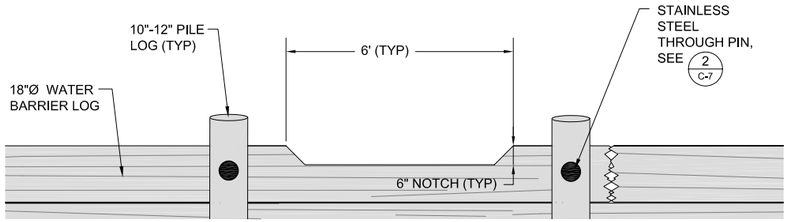

WATER BARRIER LOW FLOW NOTCH DETAIL (TYP)

3 / C-15

SCALE: 1:5

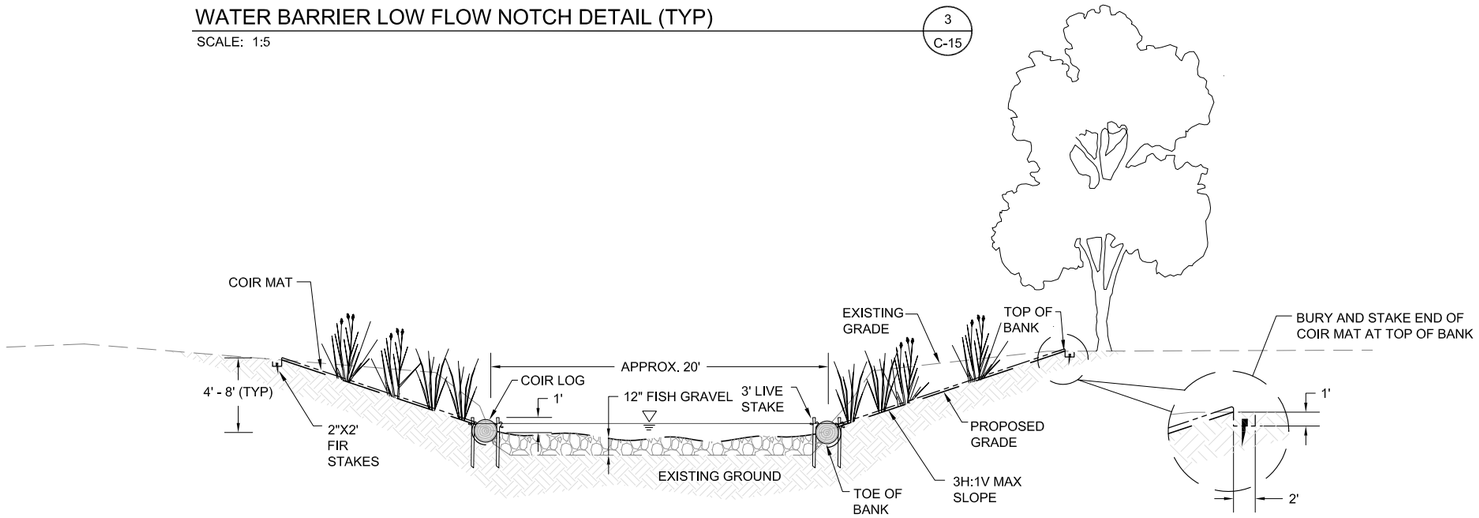

BANK STABILIZATION ALONG EAST FORK NOOKACHAMPS CREEK (TYP)

1 / -

SCALE: 1:5

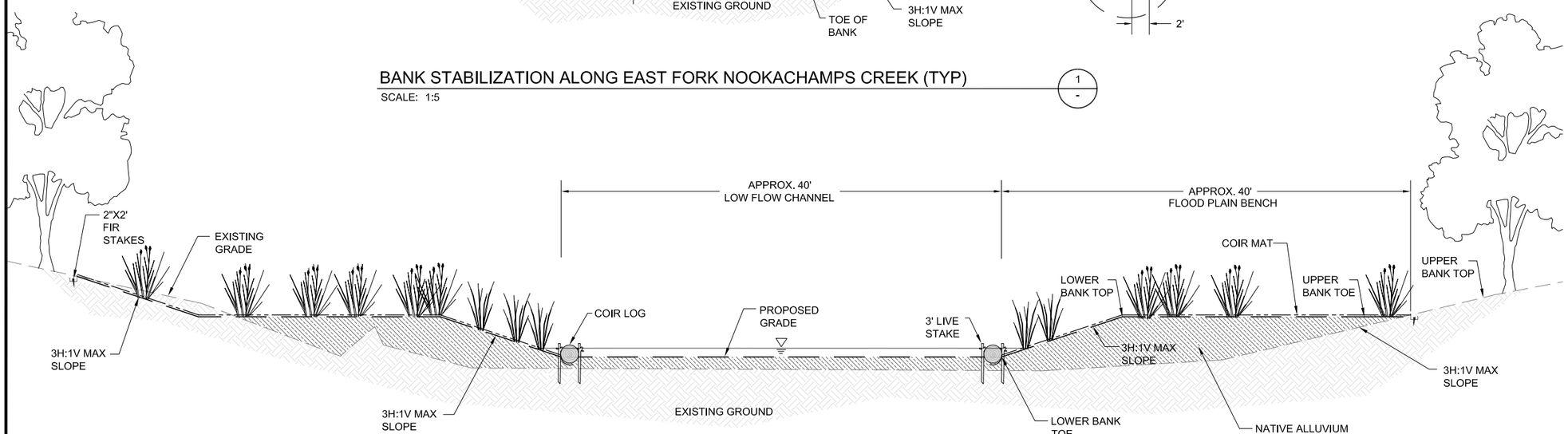

ELJ #1 OCCURS IN A SECTION OF NOOKACHAMPS CREEK THAT IS DOMINATED BY SILTS. FISH GRAVEL IN PLUNGE POOLS IS USED PRIMARILY TO PREVENT SCOUR.

BANK STABILIZATION ALONG NOOKACHAMPS CREEK (ELJ #1)

2 / -

SCALE: 1:5

GENERAL NOTES:

1. FILL MATERIAL AT ELJ CONSTRUCTION SITES TO CONSIST OF LOCAL BANK SEDIMENT. FILL MATERIAL AT END OF FILLED DITCHES TO CONSIST OF DITCH FILL MATERIAL.
2. WHERE BANK STABILIZATION IS INSTALLED TO PREVENT HEAD CUTS WHEN FILLED DITCHES TERMINATE AT STREAM BANKS, BOTTOM OF STABILIZATION SHALL BE THE EXISTING DITCH BOTTOM. WHERE BANK STABILIZATION IS INSTALLED AT ELJ CONSTRUCTION SITES, BOTTOM OF BANK STABILIZATION SHALL BE THE BANK TOE AT BASE OF FISH GRAVEL.
3. SEE C-21 FOR STREAM BANK RE-VEGETATION.

COIR MAT/COIR LOG

COIR MAT

1. COIR MAT SHALL BE 100 PERCENT WOVEN MATTING OF COIR YARN MADE FROM WHITE (RETTED) COCONUT FIBER MEETING THE FOLLOWING MINIMUM PARAMETERS: WEIGHT - 900 GRAMS/SQUARE METER (ASTM D 3776); WET TENSILE STRENGTH - 1,200 LB/FOOT (ASTM D 4595); MANUFACTURER RECOMMENDED FLOW - 16 FPS; MANUFACTURER RECOMMENDED SHEER STRENGTH 5.0 LB/SQUARE FOOT.
2. COIR MAT SHALL BE ANCHORED WITH WOODEN STAKES PER THE MANUFACTURER RECOMMENDATION FOR THIS APPLICATION
3. COIR MAT SHALL BE INSTALLED OVER ALL AREAS OF REGARDED STREAM BANKS IMMEDIATELY FOLLOWING PLACEMENT OF NATIVE FILL.
4. COIR MAT SHALL BE ANCHORED AT TOE USING COIR LOG.

COIR LOG

1. COIR LOG SHALL BE A 100% COCONUT FIBER ROLL, 20' LONG, APPROXIMATELY 15" DIAMETER WITH A MINIMUM DENSITY OF 9 LB/CUBIC FOOT. OUTER NETTING SHALL BE 100 PERCENT NATURAL FIBER TWINE WITH BREAKING STRENGTH OF 80 LBS, WITH 2X2" MESH AND KNOTTED JUNCTIONS.
2. COIR LOGS SHALL BE ANCHORED WITH 2X2" NOTCHED WOODEN STAKES, 24" MINIMUM LENGTH INSTALLED 1 FOOT O.C. ALTERNATING SIDES OF THE LOG. LIVE STAKES TO BE INSTALLED 1 FOOT O.C. ALTERNATING SIDES OF LOG OPPOSITE WOODEN STAKES.
3. LIVE STAKES WILL BE INSTALLED TO A DEPTH OF ⅔ OF TOTAL STAKE LENGTH. PLANT MATERIAL SHALL CONSIST OF THE FOLLOWING: SITKA WILLOW (*SALIX SITCHENSIS*), PACIFIC WILLOW (*SALIX LUCIDA*), AND RED-OSIER DOGWOOD (*CORNUS STOLONIFERA*).

LEGEND

- FISH GRAVEL
- EXISTING GROUND
- NATIVE ALLUVIUM FILL
- LOW FLOW STREAM ELEVATION

© 2007 Herrera Environmental, Inc. All rights reserved.

ONE INCH
AT FULL SIZE, IF NOT ONE INCH SCALE ACCORDINGLY

No.	REVISION	BY	APP'D	DATE
6	REVISION NO. 6	MRM	MS	2/08
5	REVISION NO. 5	MRM	MS	12/07
4	REVISION NO. 4	MRM	MS	9/07
3	REVISION NO. 3	MRM	MS	8/07
2	REVISION NO. 2	MRM	MS	6/06
1	REVISION NO. 1	MRM	MS	5/06

HERRERA ENVIRONMENTAL CONSULTANTS
2200 Sixth Avenue
Suite 1100
Seattle, Washington
98121-1820
206-441-9080
206-441-9108 FAX
http://www.herreralnc.com

DESIGNED: M. MERKELBACH	DRAWN: L. TURNIDGE
DESIGNED: -	DRAWN: -
DESIGNED: -	CHECKED: G. KAYS
SCALE: AS NOTED	APPROVED: M. SPILLANE

SKAGIT ENVIRONMENTAL BANK
PHASE 1

BANK STABILIZATION

DATE: FEBRUARY 2008
PROJECT NO: 04-02822-003
DRAWING NO: C-15
SHEET NO: 19 OF 46

Path: O:\proj\04-02822-003\Cad\Dwgs\Phase 1-2-3 Rev 6\C-15.dwg
Plot Date: 3/5/2008 3:49 PM Cad User: Wojciech Wieszczeciński
Plot Style Table: Herrera.ctb Plotter: Adobe PDF

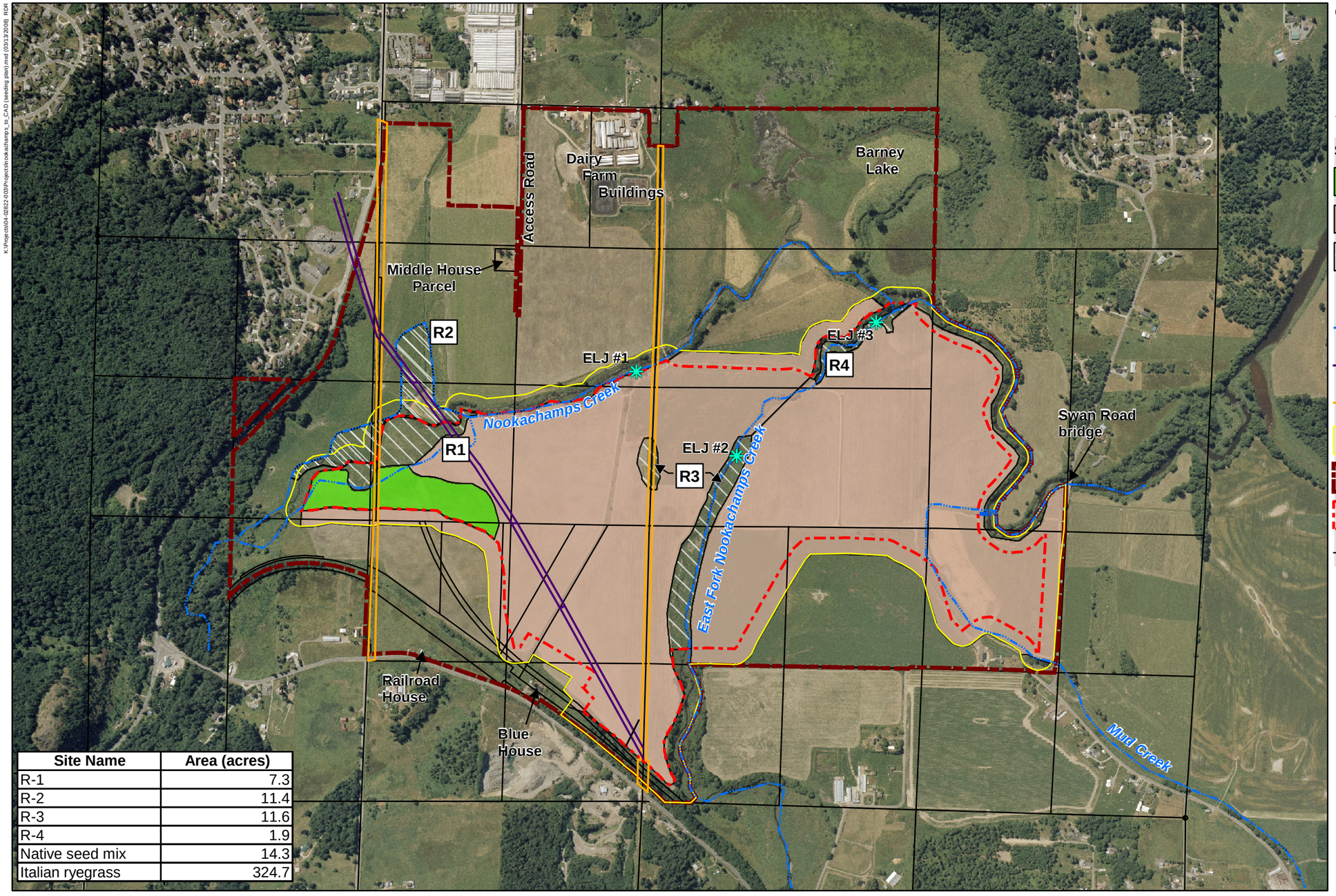

Site Name	Area (acres)
R-1	7.3
R-2	11.4
R-3	11.6
R-4	1.9
Native seed mix	14.3
Italian ryegrass	324.7

0 500 1,000 2,000 ft

1 in = 1000 ft

N

Legend :

Seeding Plan

- Native seed mix
- Italian ryegrass
- R1 Reed canarygrass
- ELJ - Grade control structure
- Stream
- Waterline easement
- Powerline easement
- Mitigation bank boundary
- Clear Valley Farm property boundary
- Edge of buffer
- Parcel boundary

Note:
1. Italian ryegrass will be applied to fallow areas to provide a temporary herbaceous cover crop prior to Phase II grading activities.

© 2006 Herrera Environmental, Inc. All rights reserved.

No.	REVISION	BY	APPD	DATE
6	REVISION NO. 6	MM	MS	02/08
5	REVISION NO. 5	MM	MS	12/07
4	REVISION NO. 4	MM	MS	09/07
3	REVISION NO. 3	MM	MS	07/07

HERRERA ENVIRONMENTAL CONSULTANTS
2200 Sixth Avenue
Suite 1100
Seattle, Washington
98121-1820
206-441-9080
206-441-9108 FAX

DESIGNED: M. MERKELBACH
DRAWN: J. SCHMIDT
DESIGNED:
DRAWN:
DESIGNED:
CHECKED:
DESIGNED:
APPROVED: M. SPILLANE

SKAGIT ENVIRONMENTAL BANK

PHASE 1

REED CANARYGRASS AND SEEDING PLAN

DATE: FEBRUARY 2008
PROJECT NO: 04-02822-003
DRAWING NO: C-16
SHEET NO: 20 of 46

NOTE:

1. THE AREA BETWEEN THE PROJECT SITE AND MITIGATION BANK BOUNDARY CONSISTS OF A 150 FOOT BUFFER ALONG THE ENTIRE SITE.

LEGEND

- STREAM
- CLEAR VALLEY FARM PROPERTY BOUNDARY
- EDGE OF BUFFER
- WETLAND LIMITS
- MITIGATION BANK BOUNDARY
- EXISTING UTILITY EASEMENT
- EXISTING TEMPORARY ACCESS ROAD
- 30 — EXISTING MAJOR CONTOUR
- EXISTING MINOR CONTOUR
- 65 — PROPOSED MAJOR CONTOUR
- 66 — PROPOSED MINOR CONTOUR
- 27 — PROPOSED SPOT ELEVATION
- PROPOSED ELJ
- POWER POLE

© 2007 Herrera Environmental Inc. All rights reserved.

ONE INCH
AT FULL SIZE, IF NOT ONE INCH SCALE ACCORDINGLY

No.	REVISION	BY	APP'D	DATE
6	REVISION NO. 6	MRM	MS	2/08
5	REVISION NO. 5	MRM	MS	12/07
4	REVISION NO. 4	MRM	MS	9/07
3	REVISION NO. 3	MRM	MS	8/07
2	REVISION NO. 2	MRM	MS	6/06
1	REVISION NO. 1	MRM	MS	5/06

HERRERA ENVIRONMENTAL CONSULTANTS
2200 Sixth Avenue
Suite 1100
Seattle, Washington
98121-1820
206-441-9080
206-441-9108 FAX
http://www.herreralnc.com

MICHAEL M. SPILLANE, STATE OF WASHINGTON, 30780, REGISTERED PROFESSIONAL ENGINEER
EXPIRES: 4/5/2009

DESIGNED: C. BARTON	DRAWN: L. TURNIDGE
DESIGNED: -	DRAWN: -
DESIGNED: -	CHECKED: M. MERKELBACH
SCALE: AS NOTED	APPROVED: M. SPILLANE

SKAGIT ENVIRONMENTAL BANK
PHASE 2

PROPOSED GRADING PLAN

DATE: FEBRUARY 2008
PROJECT NO: 04-02822-003
DRAWING NO: C-17
SHEET NO: 21 OF 46

Path: O:\proj\04-02822-003\Cad\Dwgs\Phase 1-2-3 Rev 6\C-17.dwg
Plot Date: 3/5/2008 3:50 PM Cad User: Wojciech Wieszczecinski
Plot Style Table: Herrera.ctb Plotter: Adobe PDF

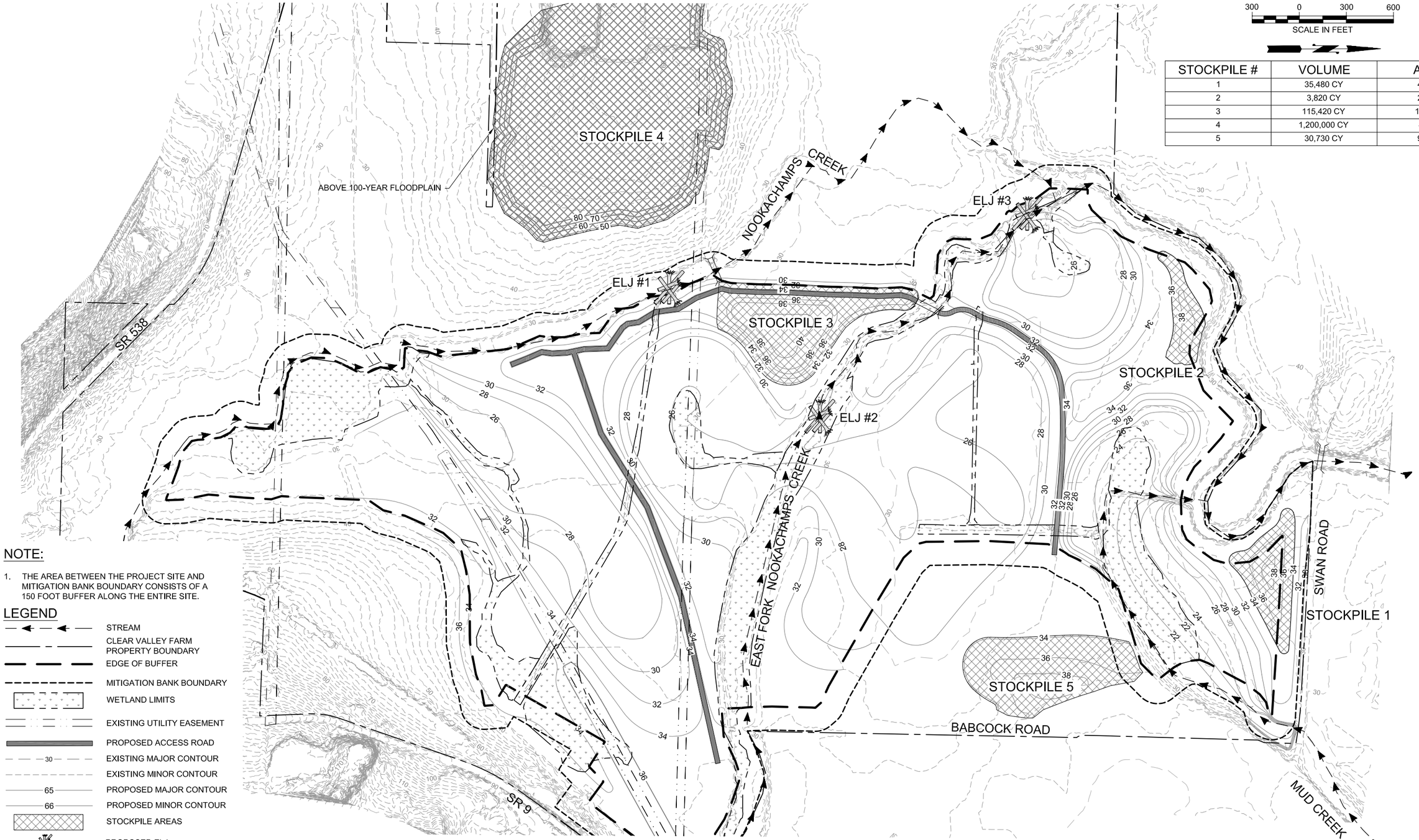

300 0 300 600
SCALE IN FEET

STOCKPILE #	VOLUME	AREA
1	35,480 CY	4.6 AC
2	3,820 CY	2.5 AC
3	115,420 CY	10.9 AC
4	1,200,000 CY	46 AC
5	30,730 CY	9.9 AC

NOTE:

1. THE AREA BETWEEN THE PROJECT SITE AND MITIGATION BANK BOUNDARY CONSISTS OF A 150 FOOT BUFFER ALONG THE ENTIRE SITE.

LEGEND

- STREAM
- CLEAR VALLEY FARM PROPERTY BOUNDARY
- EDGE OF BUFFER
- MITIGATION BANK BOUNDARY
- WETLAND LIMITS
- EXISTING UTILITY EASEMENT
- PROPOSED ACCESS ROAD
- 30 — EXISTING MAJOR CONTOUR
- EXISTING MINOR CONTOUR
- 65 — PROPOSED MAJOR CONTOUR
- 66 — PROPOSED MINOR CONTOUR
- STOCKPILE AREAS
- PROPOSED ELJ

© 2007 Herrera Environmental Inc. All rights reserved.

ONE INCH
AT FULL SIZE, IF NOT ONE INCH SCALE ACCORDINGLY

No.	REVISION	BY	APP'D	DATE
6	REVISION NO. 6	MRM	MS	2/08
5	REVISION NO. 5	MRM	MS	12/07
4	REVISION NO. 4	MRM	MS	9/07
3	REVISION NO. 3	MRM	MS	8/07
2	REVISION NO. 2	MRM	MS	6/06
1	REVISION NO. 1	MRM	MS	5/06

HERRERA ENVIRONMENTAL CONSULTANTS
2200 Sixth Avenue
Suite 1100
Seattle, Washington
98121-1820
206-441-9080
206-441-9108 FAX
http://www.herreralnc.com

MICHAEL M. SPILLANE
STATE OF WASHINGTON
30780
REGISTERED PROFESSIONAL ENGINEER
EXPIRES: 4/5/2009

DESIGNED: M. MERKELBACH	DRAWN: L. TURNIDGE
DESIGNED: -	DRAWN: -
DESIGNED: -	CHECKED: -
SCALE: AS NOTED	APPROVED: M. SPILLANE

SKAGIT ENVIRONMENTAL BANK
PHASE 2

STOCKPILE AREAS

DATE: FEBRUARY 2008
PROJECT NO: 04-02822-003
DRAWING NO: C-18
SHEET NO: 22 OF 46

Path: O:\proj\04-02822-003\Cad\Dwgs\Phase 1-2-3 Rev 6\C-18.dwg
Plot Date: 3/5/2008 3:50 PM Cad User: Wojciech Wieszczecinski
Plot Style Table: Herrera.ctb Plotter: Adobe PDF

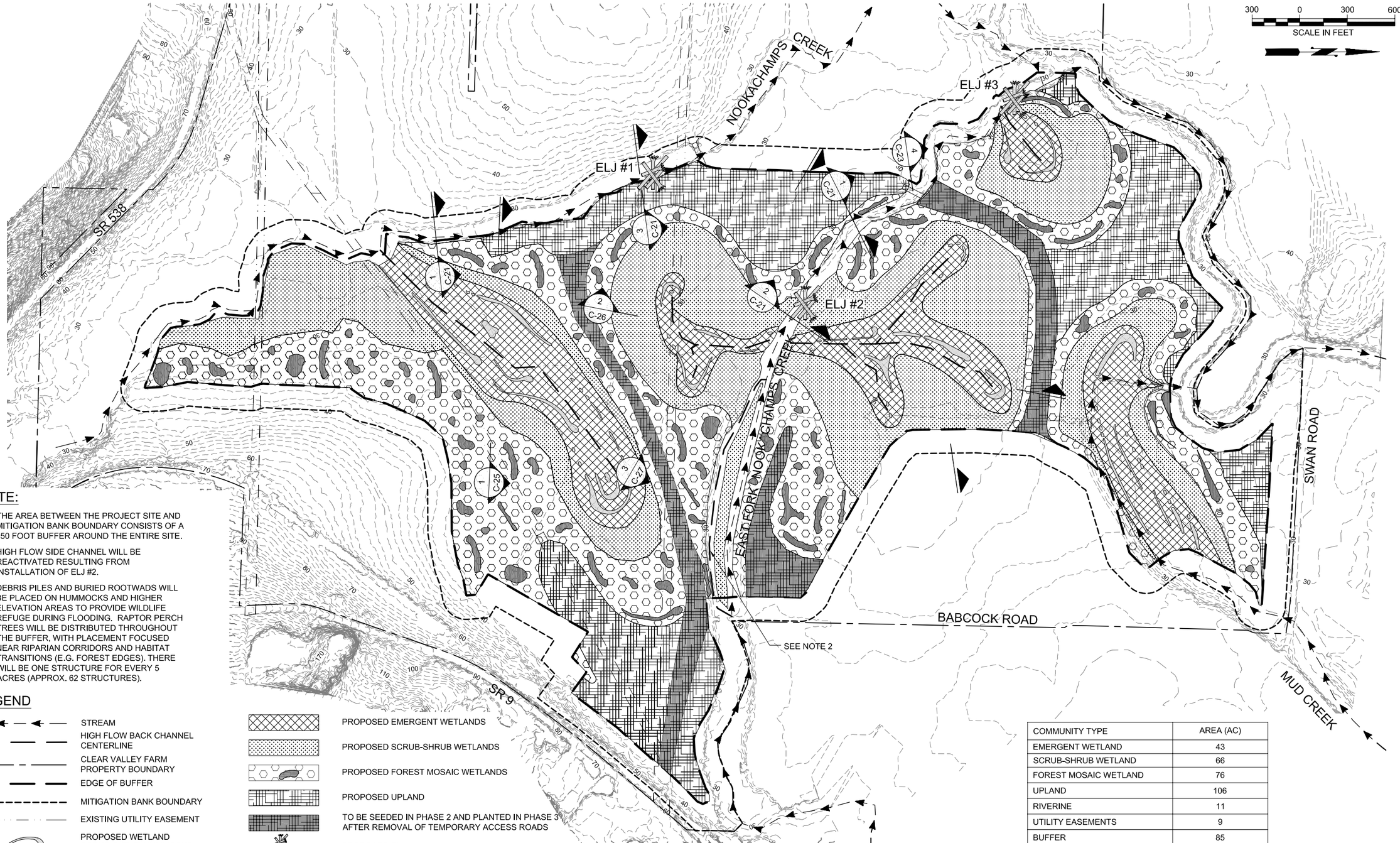

NOTE:

1. THE AREA BETWEEN THE PROJECT SITE AND MITIGATION BANK BOUNDARY CONSISTS OF A 150 FOOT BUFFER AROUND THE ENTIRE SITE.
2. HIGH FLOW SIDE CHANNEL WILL BE REACTIVATED RESULTING FROM INSTALLATION OF ELJ #2.
3. DEBRIS PILES AND BURIED ROOTWADS WILL BE PLACED ON HUMMOCKS AND HIGHER ELEVATION AREAS TO PROVIDE WILDLIFE REFUGE DURING FLOODING. RAPTOR PERCH TREES WILL BE DISTRIBUTED THROUGHOUT THE BUFFER, WITH PLACEMENT FOCUSED NEAR RIPARIAN CORRIDORS AND HABITAT TRANSITIONS (E.G. FOREST EDGES). THERE WILL BE ONE STRUCTURE FOR EVERY 5 ACRES (APPROX. 62 STRUCTURES).

LEGEND

- STREAM
- HIGH FLOW BACK CHANNEL CENTERLINE
- CLEAR VALLEY FARM PROPERTY BOUNDARY
- EDGE OF BUFFER
- MITIGATION BANK BOUNDARY
- EXISTING UTILITY EASEMENT
- PROPOSED WETLAND SCRUB-SHRUB HUMMOCKS
- PROPOSED EMERGENT WETLANDS
- PROPOSED SCRUB-SHRUB WETLANDS
- PROPOSED FOREST MOSAIC WETLANDS
- PROPOSED UPLAND
- TO BE SEEDED IN PHASE 2 AND PLANTED IN PHASE 3 AFTER REMOVAL OF TEMPORARY ACCESS ROADS
- PROPOSED ELJ

COMMUNITY TYPE	AREA (AC)
EMERGENT WETLAND	43
SCRUB-SHRUB WETLAND	66
FOREST MOSAIC WETLAND	76
UPLAND	106
RIVERINE	11
UTILITY EASEMENTS	9
BUFFER	85
TOTAL:	396

ONE INCH
AT FULL SIZE, IF NOT ONE INCH SCALE ACCORDINGLY

© 2007 Herrera Environmental, Inc. All rights reserved.

No.	REVISION	BY	APP'D	DATE
6	REVISION NO. 6	MRM	MS	2/08
5	REVISION NO. 5	MRM	MS	12/07
4	REVISION NO. 4	MRM	MS	9/07
3	REVISION NO. 3	MRM	MS	8/07
2	REVISION NO. 2	MRM	MS	6/06
1	REVISION NO. 1	MRM	MS	5/06

HERRERA ENVIRONMENTAL CONSULTANTS
2200 Sixth Avenue
Suite 1100
Seattle, Washington
98121-1820
206-441-9080
206-441-9108 FAX
http://www.herreralnc.com

DESIGNED: K. NOON
DRAWN: L. TURNIDGE
DESIGNED: -
DRAWN: -
DESIGNED: -
CHECKED: M. MERKELBACH
SCALE: AS NOTED
APPROVED: M. SPILLANE

SKAGIT ENVIRONMENTAL BANK
PHASE 2

PROPOSED PLANTING PLAN

DATE: FEBRUARY 2008
PROJECT NO: 04-02822-003
DRAWING NO: C-19
SHEET NO: 23 OF 46

Path: O:\proj\04-02822-003\Cad\Dwgs\Phase 1-2-3 Rev 6\C-19.dwg
Plot Date: 3/5/2008 3:51 PM Cad User: Wojciech Wieszczeciński
Plot Style Table: Herrera.ctb Plotter: Adobe PDF

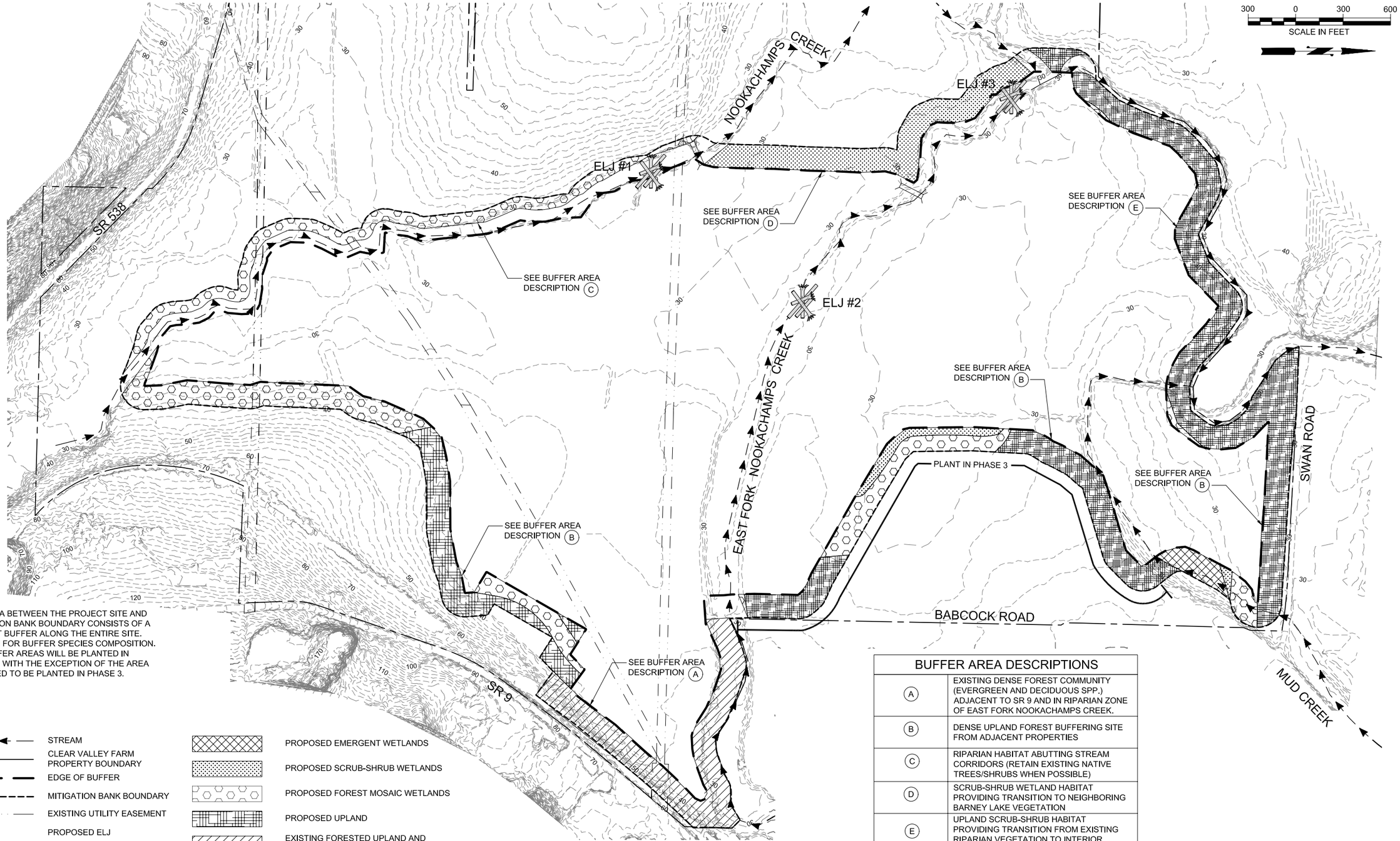

;;NOTES:

1. THE AREA BETWEEN THE PROJECT SITE AND MITIGATION BANK BOUNDARY CONSISTS OF A 150 FOOT BUFFER ALONG THE ENTIRE SITE.
2. SEE C-24 FOR BUFFER SPECIES COMPOSITION.
3. ALL BUFFER AREAS WILL BE PLANTED IN PHASE 2, WITH THE EXCEPTION OF THE AREA INDICATED TO BE PLANTED IN PHASE 3.

LEGEND

- STREAM
- CLEAR VALLEY FARM PROPERTY BOUNDARY
- EDGE OF BUFFER
- MITIGATION BANK BOUNDARY
- EXISTING UTILITY EASEMENT
- PROPOSED ELJ
- PROPOSED EMERGENT WETLANDS
- PROPOSED SCRUB-SHRUB WETLANDS
- PROPOSED FOREST MOSAIC WETLANDS
- PROPOSED UPLAND
- EXISTING FORESTED UPLAND AND RIPARIAN AREA

BUFFER AREA DESCRIPTIONS

(A)	EXISTING DENSE FOREST COMMUNITY (EVERGREEN AND DECIDUOUS SPP.) ADJACENT TO SR 9 AND IN RIPARIAN ZONE OF EAST FORK NOOKACHAMPS CREEK.
(B)	DENSE UPLAND FOREST BUFFERING SITE FROM ADJACENT PROPERTIES
(C)	RIPARIAN HABITAT ABUTTING STREAM CORRIDORS (RETAIN EXISTING NATIVE TREES/SHRUBS WHEN POSSIBLE)
(D)	SCRUB-SHRUB WETLAND HABITAT PROVIDING TRANSITION TO NEIGHBORING BARNEY LAKE VEGETATION
(E)	UPLAND SCRUB-SHRUB HABITAT PROVIDING TRANSITION FROM EXISTING RIPARIAN VEGETATION TO INTERIOR UPLAND AND WETLAND AREAS.

© 2007 Herrera Environmental, Inc. All rights reserved.

ONE INCH
AT FULL SIZE, IF NOT ONE INCH SCALE ACCORDINGLY

No.	REVISION	BY	APP'D	DATE
6	REVISION NO. 6	MRM	MS	2/08
5	REVISION NO. 5	MRM	MS	12/07

HERRERA ENVIRONMENTAL CONSULTANTS
2200 Sixth Avenue
Suite 1100
Seattle, Washington
98121-1820
206-441-9080
206-441-9108 FAX
http://www.herreralnc.com

DESIGNED: C. ELLIOT	DRAWN: L. TURNIDGE
DESIGNED: -	DRAWN: -
DESIGNED: -	CHECKED: M. MERKELBACH
SCALE: AS NOTED	APPROVED: M. SPILLANE

SKAGIT ENVIRONMENTAL BANK
PHASE 2 / 3

PROPOSED BUFFER PLAN

DATE: FEBRUARY 2008
PROJECT NO: 04-02822-003
DRAWING NO: C-20
SHEET NO: 24 OF 46

Path: O:\proj\04-02822-003\Cad\Dwgs\Phase 1-2-3 Rev 6\C-20.dwg
Plot Date: 3/5/2008 3:52 PM Cad User: Wojciech Wieszczecinski
Plot Style Table: Herrera.ctb Plotter: Adobe PDF

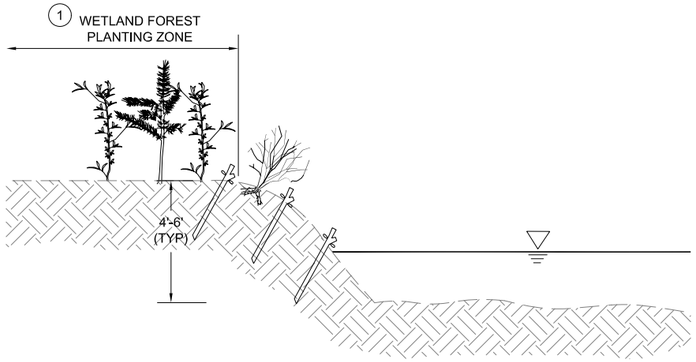

STREAM BANK RE-VEGETATION ALONG NOOKACHAMPS CREEK AND EAST FORK NOOKACHAMPS CREEK (TYP) (1 / -)

SCALE: NTS

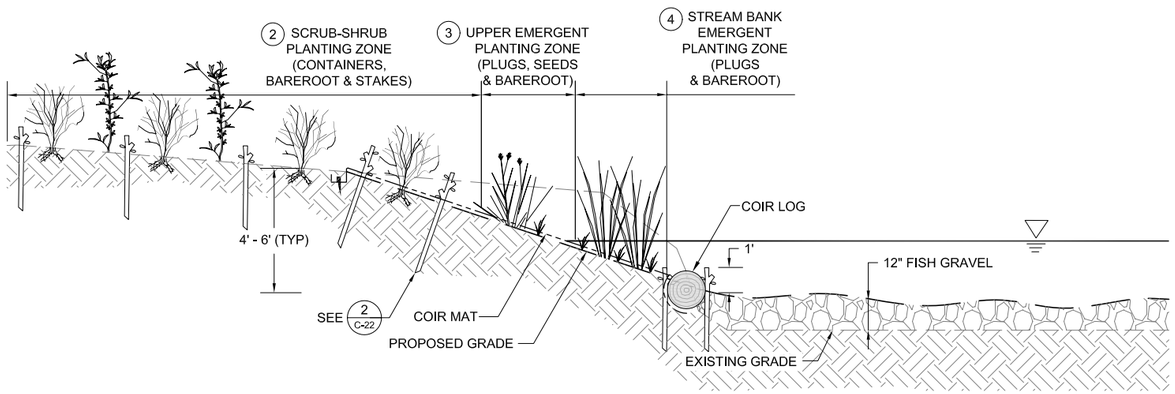

STREAM BANK RE-VEGETATION ALONG EAST FORK NOOKACHAMPS CREEK (ELJ#2/#3) (2 / -)

SCALE: NTS

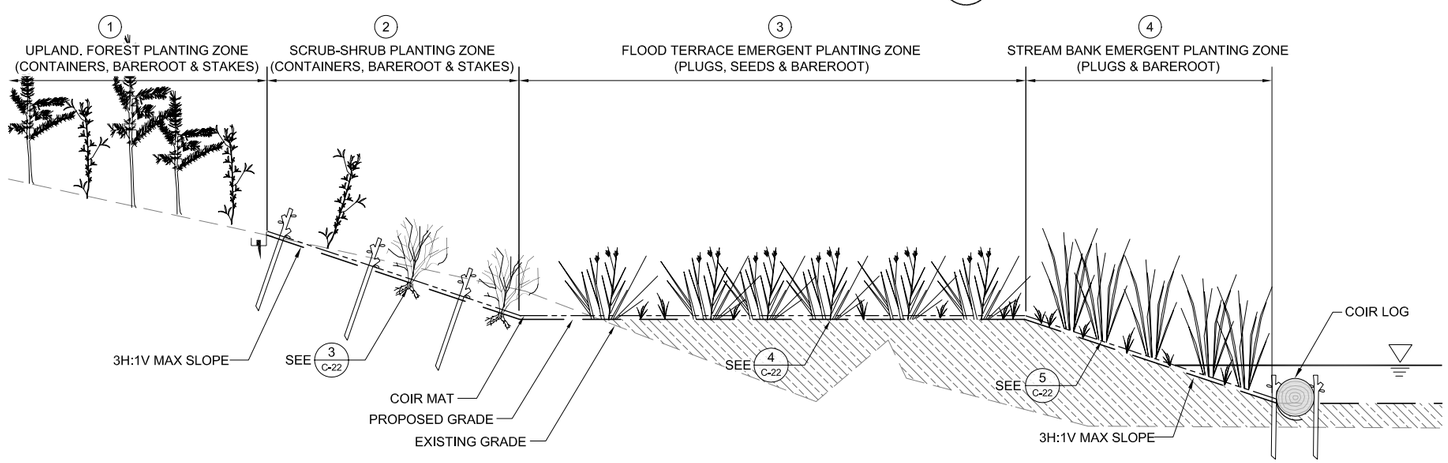

STREAM BANK RE-VEGETATION ALONG NOOKACHAMPS CREEK (ELJ #1) (3 / -)

SCALE: NTS

LEGEND

- FISH GRAVEL
- EXISTING GROUND
- NATIVE ALLUVIUM FILL
- LOW FLOW STREAM ELEVATION
- COIR MAT
- PROPOSED GRADE

SELECT SPECIES:

1. UPLAND FOREST AND WETLAND FOREST MOSAIC PLANTING ZONES:
   - BLACK COTTONWOOD (*POPULUS BALSAMIFERA SSP. TRICHOCARPA*)
   - RED ALDER (*ALNUS RUBRA*)
   - PACIFIC WILLOW (*SALIX LUCIDA*)
   - WESTERN RED CEDAR (*THUJA PLICATA*)
   - SITKA SPRUCE (*PICEA SITCHENSIS*)
   - DOUGLAS FIR (PSEUDOTSUGA MENZIESII)
2. SCRUB-SHRUB PLANTING ZONE:
   - SITKA WILLOW (*SALIX SITCHENSIS*)
   - HOOKER'S WILLOW (*SALIX HOOKERIANA*)
   - RED OSIER DOGWOOD (*CORNUS SERICEA*)
   - BLACK TWINBERRY (*LONICERA INVOLUCRATA*)
3. UPPER EMERGENT/FLOOD TERRACE EMERGENT PLANTING ZONE:
   - SMALL-FRUITED BULRUSH (*SCIRPUS MICROCARPUS*)
   - TUFTED HAIRGRASS (*DESCHAMPSIA CESPITOSA*)
   - DAGGERLEAF RUSH (*JUNCUS ENSIFOLIUS*)
   - DOUGLAS ASTER (*ASTER SUBSPICATUS*)
4. STREAM BANK EMERGENT PLANTING ZONE:
   - HARD-STEM BULRUSH (*SCIRPUS ACUTUS*)
   - SLOUGH SEDGE (*CAREX OBNUPTA*)
   - COMMON SPIKERUSH (*ELEOCHARIS PALUSTRIS*)
   - THREE-SQUARE BULRUSH (*SCIRPUS AMERICANUS*)

© 2007 Herrera Environmental, Inc. All rights reserved.

ONE INCH
AT FULL SIZE, IF NOT ONE INCH SCALE ACCORDINGLY

No.	REVISION	BY	APP'D	DATE
6	REVISION NO. 6	MRM	MS	2/08
5	REVISION NO. 5	MRM	MS	12/07

HERRERA ENVIRONMENTAL CONSULTANTS
2200 Sixth Avenue
Suite 1100
Seattle, Washington
98121-1820
206-441-9080
206-441-9108 FAX
http://www.herreralnc.com

DESIGNED: J. WASNIAK	DRAWN: L. TURNIDGE
DESIGNED: -	DRAWN: -
DESIGNED: -	CHECKED: M. MERKELBACH
SCALE: AS NOTED	APPROVED: M. SPILLANE

SKAGIT ENVIRONMENTAL BANK

STREAM BANK RE-VEGETATION

DATE: FEBRUARY 2008
PROJECT NO: 04-02822-003
DRAWING NO: C-21
SHEET NO: 25 OF 46

Path: O:\proj\04-02822-003\Cad\Dwgs\Phase 1-2-3 Rev 6\C-21.dwg
Plot Date: 3/5/2008 3:53 PM Cad User: Wojciech Wieszczeciński
Plot Style Table: Herrera.ctb Plotter: Adobe PDF

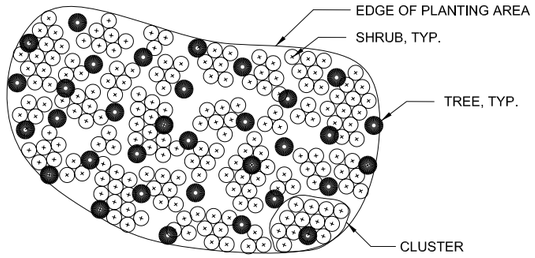

NOTES:

1. PLANT SHRUBS OF SAME SPECIES IN CLUSTERS OF THREE, FIVE, SEVEN OR THIRTEEN.
2. PLACE SHRUBS 6 FEET ON CENTER WITHIN EACH CLUSTER. PLACE TREES 10 FEET ON CENTER BETWEEN CLUSTERS. (PLANTING DENSITIES WILL BE GREATER IN AREAS WITH REED CANARYGRASS.)
3. EVENLY SPACE CLUSTERS THROUGHOUT PLANTING AREA.
4. INTENT OF SHRUB PLANTING ARRANGEMENT IS TO ENCOURAGE NATURAL, IRREGULAR PATCH FORMATION.

TREE AND SHRUB SPACING FOR FORESTED AREAS (1 / -)

SCALE: NTS

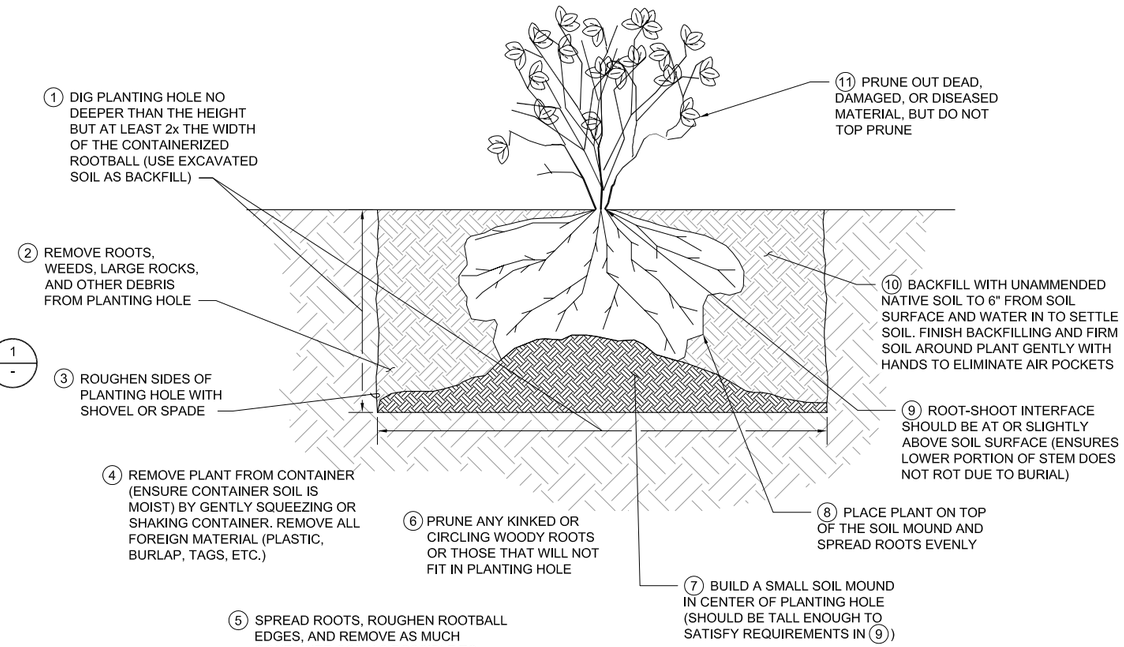

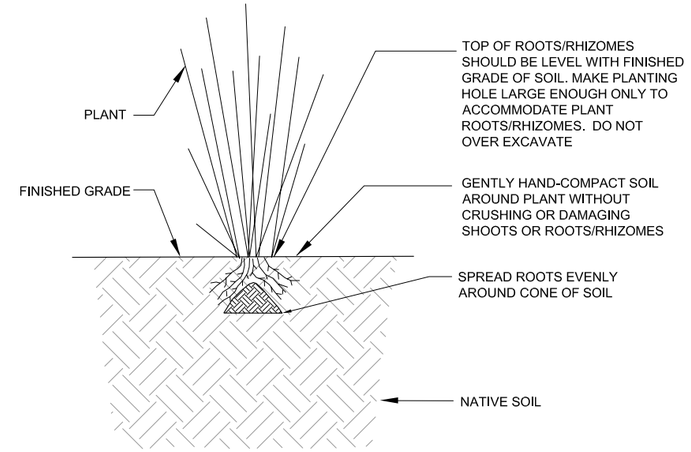

BARE ROOT EMERGENT PLANTING (4 / -)

SCALE: NTS

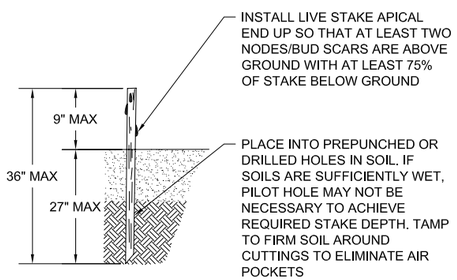

NOTES:

1. LIVE STAKES SHOULD BE 1/2-1 INCHES IN DIAMETER AND AT LEAST 36 INCHES IN LENGTH.
2. KEEP LIVE STAKES COVERED, COOL, AND MOIST AT ALL TIMES PRIOR TO PLANTING. AT NO TIME SHOULD LIVE STAKES BE EXPOSED AND ALLOWED TO DRY OUT.
3. WHEN PLANTING ON STREAM BANKS, ANGLE STAKES SLIGHTLY DOWNSTREAM.

LIVE STAKE CUTTING INSTALLATION (2 / -)

SCALE: NTS

NOTES:

- INSPECT PLANT MATERIAL PRIOR TO ACCEPTANCE OF DELIVERY. PLANTS SHOULD BE FREE OF DISEASE AND INJURY AND SHOULD NOT EXHIBIT POOR PRUNING OR CIRCLING, GIRDLING, OR KINKED ROOTS.
- ALL PLANT MATERIAL SHOULD BE TRANSPORTED TO THE SITE AT LEAST ONE WEEK PRIOR TO INSTALLATION TO FACILITATE HARDENING OFF AND ADEQUATE ACCLIMATION TO SITE CONDITIONS.
- PLANTING HOLES ON SLOPES SHOULD BE 3x ROOTBALL WIDTH.
- IF DEER BROWSING OR OTHER TYPES OF HERBIVORY ARE ANTICIPATED ON SITE, TREE SHELTERS SHOULD BE USED TO MINIMIZE DAMAGE TO PLANTINGS.

SHRUB AND TREE INSTALLATION (3 / -)

SCALE: NTS

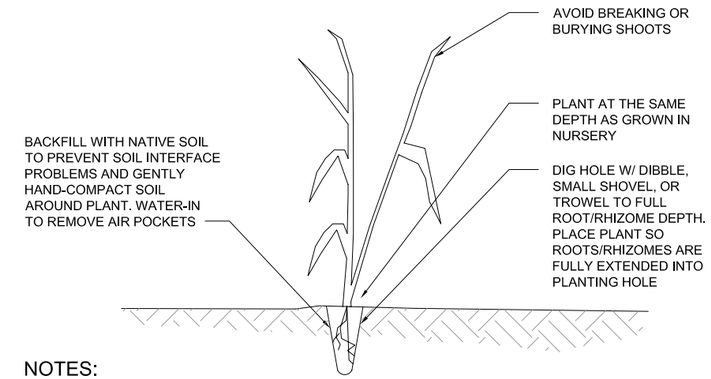

NOTES:

1. EMERGENT PLANTS SHOULD BE SPACED 12 INCHES ON CENTER.
2. PLANTING AND ENHANCEMENT ACTIVITIES IN EMERGENT ZONES SHOULD BE DONE WITH CARE TO MINIMIZE IMPACTS TO SOIL STRUCTURE AND DAMAGE TO EXISTING NATIVE VEGETATION.

PLUG/DIVISION EMERGENT PLANTING (5 / -)

SCALE: NTS

© 2007 Herrera Environmental, Inc. All rights reserved.

ONE INCH — AT FULL SIZE, IF NOT ONE INCH SCALE ACCORDINGLY

No.	REVISION	BY	APP'D	DATE
6	REVISION NO. 6	MRM	MS	2/08
5	REVISION NO. 5	MRM	MS	12/07

HERRERA ENVIRONMENTAL CONSULTANTS
2200 Sixth Avenue
Suite 1100
Seattle, Washington
98121-1820
206-441-9080
206-441-9108 FAX
http://www.herreralnc.com

DESIGNED: M. MERKELBACH	DRAWN: L. TURNIDGE
DESIGNED: -	DRAWN: -
DESIGNED: -	CHECKED: -
SCALE: AS NOTED	APPROVED: M. SPILLANE

SKAGIT ENVIRONMENTAL BANK

WETLAND PLANTING DETAILS

DATE: FEBRUARY 2008
PROJECT NO: 04-02822-003
DRAWING NO: C-22
SHEET NO: 26 OF 46

Path: O:\proj\04-02822-003\Cad\Dwgs\Phase 1-2-3 Rev 6\C-22.dwg
Plot Date: 3/5/2008 3:53 PM Cad User: Wojciech Wieszczecinski
Plot Style Table: Herrera.ctb Plotter: Adobe PDF

NOTES:

1. INSTALL PERCH TREE IN LOCATION SHOWN ON PLANS. BURY AS SHOWN TO SECURE TREE IN AN UPRIGHT POSITION.
2. DO NOT TREAT TREE WITH ANY PRESERVATIVES, STAINS, OR CHEMICAL TREATMENTS.
3. RAPTOR PERCH TREES WILL BE DISTRIBUTED THROUGHOUT THE SITE, WITH PLACEMENT FOCUSED NEAR STREAM CORRIDORS AND HABITAT TRANSITIONS (E.G. FOREST EDGES).
4. PERCH TREES SHOULD BE MINIMUM 12 IN. DBH.

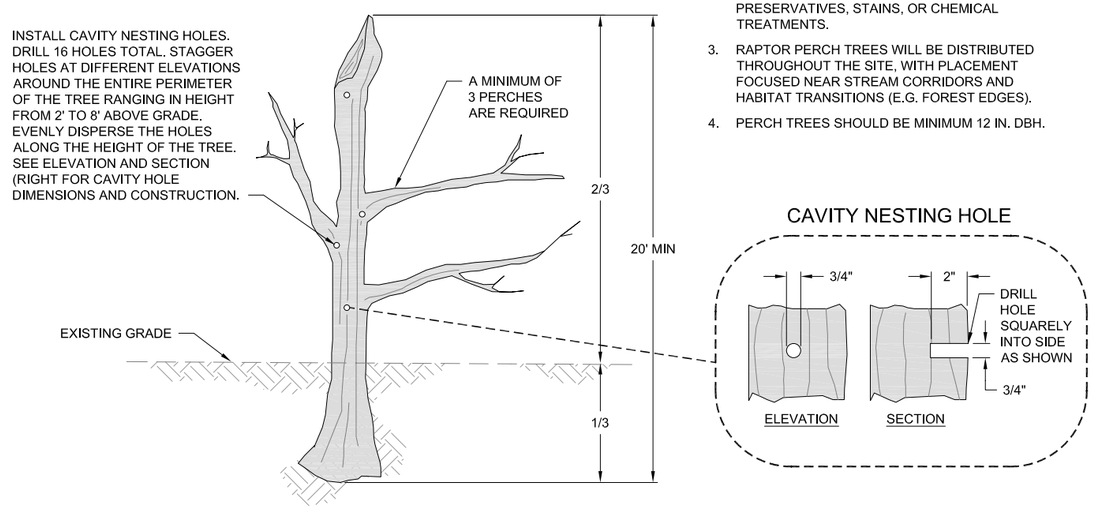

DETAIL - RAPTOR PERCH TREE

SCALE: NTS

1
-

© 2007 Herrera Environmental, Inc. All rights reserved.

ONE INCH
AT FULL SIZE, IF NOT ONE INCH SCALE ACCORDINGLY

No.	REVISION	BY	APP'D	DATE
6	REVISION NO. 6	MRM	MS	2/08
5	REVISION NO. 5	MRM	MS	12/07

HERRERA ENVIRONMENTAL CONSULTANTS
2200 Sixth Avenue
Suite 1100
Seattle, Washington
98121-1820
206-441-9080
206-441-9108 FAX
http://www.herreralnc.com

DESIGNED: M. MERKELBACH	DRAWN: L. TURNIDGE
DESIGNED: -	DRAWN: -
DESIGNED: -	CHECKED: -
SCALE: AS NOTED	APPROVED: M. SPILLANE

SKAGIT ENVIRONMENTAL BANK
PHASE 1

HABITAT STRUCTURES

DATE: FEBRUARY 2008
PROJECT NO: 04-02822-003
DRAWING NO: C-23
SHEET NO: 27 OF 46

Path: O:\proj\04-02822-003\Cad\Dwgs\Phase 1-2-3 Rev 6\C-23.dwg
Plot Date: 3/10/2008 11:24 AM Cad User: Laura Turnidge
Plot Style Table: Herrera.ctb Plotter: Adobe PDF

PROPOSED PLANTING LIST

SPECIES COMMON NAME	SCIENTIFIC NAME	WETLAND INDICATOR STATUS
FORESTED WETLAND ZONES		
BLACK COTTONWOOD	*POPULUS BALSAMIFERA SSP. TRICHOCARPA*	FAC
CASCARA	*RHAMNUS PURSHIANA*	FAC-
PACIFIC WILLOW	*SALIX LUCIDA*	NI
RED ALDER	*ALNUS RUBRA*	FAC
SITKA SPRUCE	*PICEA SITCHENSIS*	FAC
WESTERN RED CEDAR	*THUJA PLICATA*	FAC
BLACK TWINBERRY	*LONICERA INVOLUCRATA*	FAC+*
NOOTKA ROSE	*ROSA NUTKANA*	FACW-
PACIFIC NINEBARK	*PHYSOCARPUS CAPITATUS*	FACW-
RED-OSIER DOGWOOD	*CORNUS SERICEA*	FACW
SALMONBERRY	*RUBUS SPECTABILIS*	FAC+
SWAMP ROSE	*ROSA PISOCARPA*	FAC
SCRUB-SHRUB WETLAND ZONES AND SCRUB-SHRUB HUMMOCKS		
BLACK TWINBERRY	*LONICERA INVOLUCRATA*	FAC+*
HOOKER'S WILLOW	*SALIX HOOKERIANA*	FACW-
NOOTKA ROSE	*ROSA NUTKANA*	FAC
PACIFIC CRABAPPLE	*MALUS FUSCA*	FACW
PACIFIC NINEBARK	*PHYSOCARPUS CAPITATUS*	FACW-
PACIFIC WILLOW	*SALIX LUCIDA*	FACW+
RED-OSIER DOGWOOD	*CORNUS SERICEA*	FACW
SALMONBERRY	*RUBUS SPECTABILIS*	FAC+
SITKA WILLOW	*SALIX SITCHENSIS*	FACW
SWAMP ROSE	*ROSA PISOCARPA*	FAC
EMERGENT WETLAND ZONES		
BALTIC RUSH	*JUNCUS BALTICUS*	FACW+
COMMON SPIKERUSH	*ELEOCHARIS PALUSTRIS*	OBL
DAGGERLEAF RUSH	*JUNCUS ENSIFOLIUS*	FACW
DOUGLAS ASTER	*ASTER SUBSPICATUS*	FACW
HARD-STEM BULRUSH	*SCIRPUS ACUTUS*	OBL
SHORT-AWN FOXTAIL	*ALOPECURUS AEQUALIS*	OBL
SIMPLE-STEM BUR-REED	*SPARGANIUM EMERSUM*	OBL
SLOUGH SEDGE	*CAREX OBNUPTA*	OBL
SMALL-FRUITED BULRUSH	*SCIRPUS MICROCARPUS*	OBL
THREE-SQUARE BULRUSH	*SCIRPUS AMERICANUS*	OBL
TUFTED HAIRGRASS	*DESCHAMPSIA CESPITOSA*	FACW
WAPATO	*SAGITTARIA LATIFOLIA*	OBL
UPLAND ZONES		
BEAKED HAZELNUT	*CORYLUS CORNUTA*	FACU
BIG LEAF MAPLE	*ACER MACROPHYLLUM*	FACU+ [FAC]
BITTER CHERRY	*PRUNUS EMARGINATA*	FACU
BLACK COTTONWOOD	*POPULUS TRICHOCARPA*	FAC
BLACK HAWTHORN	*CRATAEGUS DOUGLASII*	FAC
DOUGLAS FIR	*PSEUDOTSUGA MENZIESII*	FACU
RED ELDERBERRY	*SAMBUCUS RACEMOSA*	FACU
RED HUCKLEBERRY	*VACCINIUM PARVIFOLIUM*	NI [FACU]
SNOWBERRY	*SYMPHORICARPOS ALBUS*	FACU
WESTERN HEMLOCK	*TSUGA HETEROPHYLLA*	FACU-
UPLAND HUMMOCKS		
BLACK COTTONWOOD	*POPULUS TRICHOCARPA*	FAC
BLACK HAWTHORN	*CRATAEGUS DOUGLASII*	FAC
DOUGLAS FIR	*PSEUDOTSUGA MENZIESII*	FACU
NOOTKA ROSE	*ROSA NUTKANA*	FACW-
SNOWBERRY	*SYMPHORICARPOS ALBUS*	FACU

GENERAL NOTES:

1. THE PLANT LIST IS SUGGESTED AND MAY BE CHANGED BASED ON LOCAL AVAILABILITY.
2. ALL PLANTS, EXCEPT AS NOTED, SHALL BE NURSERY CONTAINER GROWN A MINIMUM OF ONE YEAR AND CONTAINERIZED PER ANSI STANDARDS. PLANT MATERIAL IS TO BE SUPPLIED BY COMMERCIAL NURSERIES THAT SPECIALIZE IN NATIVE PLANTS. PLANT SUBSTITUTIONS ARE SUBJECT TO APPROVAL BY THE ENGINEER.
3. PLANTS SHALL BE RANDOMLY MIXED THROUGHOUT EACH PLANTING ZONE. LAYOUT OF ALL PLANT MATERIAL AND SEEDING TO BE APPROVED BY THE ENGINEER PRIOR TO INSTALLATION. USE PLAN FOR QUANTITIES – FINAL LOCATIONS OF PLANTS SUBJECT TO CHANGE.
4. ALL SHRUB AND TREE PLANTING, INCLUDING CONIFERS, SHALL OCCUR DURING THE DORMANT SEASON (NOVEMBER THROUGH FEBRUARY).
5. CONIFER PLANTING WITHIN WETLAND, UPLAND, AND BUFFER AREAS SHALL ALL BE PLANTED IN PHASE II, EXCEPT IN AREAS IDENTIFIED ON C-18. THESE AREAS WILL BE PLANTED IN PHASE III.

BUFFER PLANTING NOTES:

1. THE BANK BUFFER WILL BE PLANTED WITH A VARIETY OF UPLAND AND WETLAND SPECIES TO CREATE A TRANSITION TO EXISTING VEGETATION COMMUNITIES AND TO PROVIDE A NATURAL SEPARATION BETWEEN THE BANK AND SURROUNDING PROPERTIES. GROUNDWATER HYDROLOGY WILL BE REASSESSED AFTER PHASE I ACTIVITIES AND THE PLANTING PLAN WILL BE REVISED ACCORDINGLY.
2. THE BUFFER PLAN IS SHOWN ON C-20 AND HABITAT TYPES CORRESPOND TO THOSE IN THE PROPOSED PLANTING PLAN ON C-19.
3. CONIFER SPECIES WILL BE PLANTED IN YEAR TWO FOLLOWING ESTABLISHMENT OF EARLIER SUCCESSIONAL SPECIES.
4. IN AREAS EXHIBITING TRANSITIONAL ENVIRONMENTAL CONDITIONS, SPECIES WILL BE PLANTED ACCORDING TO HYDROLOGIC PREFERENCE.

© 2007 Herrera Environmental Inc. All rights reserved.

ONE INCH
AT FULL SIZE, IF NOT ONE INCH SCALE ACCORDINGLY

No.	REVISION	BY	APP'D	DATE
6	REVISION NO. 6	MRM	MS	2/08
5	REVISION NO. 5	MRM	MS	12/07
4	REVISION NO. 4	MRM	MS	9/07
3	REVISION NO. 3	MRM	MS	8/07
2	REVISION NO. 2	MRM	MS	6/06
1	REVISION NO. 1	MRM	MS	5/06

HERRERA ENVIRONMENTAL CONSULTANTS
2200 Sixth Avenue
Suite 1100
Seattle, Washington
98121-1820
206-441-9080
206-441-9108 FAX
http://www.herreralnc.com

DESIGNED: M. MERKELBACH
DRAWN: L. TURNIDGE
DESIGNED: -
DRAWN: -
DESIGNED: -
CHECKED: -
SCALE: AS NOTED
APPROVED: M. SPILLANE

SKAGIT ENVIRONMENTAL BANK

PLANTING LIST

DATE: FEBRUARY 2008
PROJECT NO: 04-02822-003
DRAWING NO: C-24
SHEET NO: 28 OF 46

Path: O:\proj\04-02822-003\Cad\Dwgs\Phase 1-2-3 Rev 6\C-24.dwg
Plot Date: 3/10/2008 11:21 AM Cad User: Laura Turnidge
Plot Style Table: Herrera.ctb Plotter: Adobe PDF

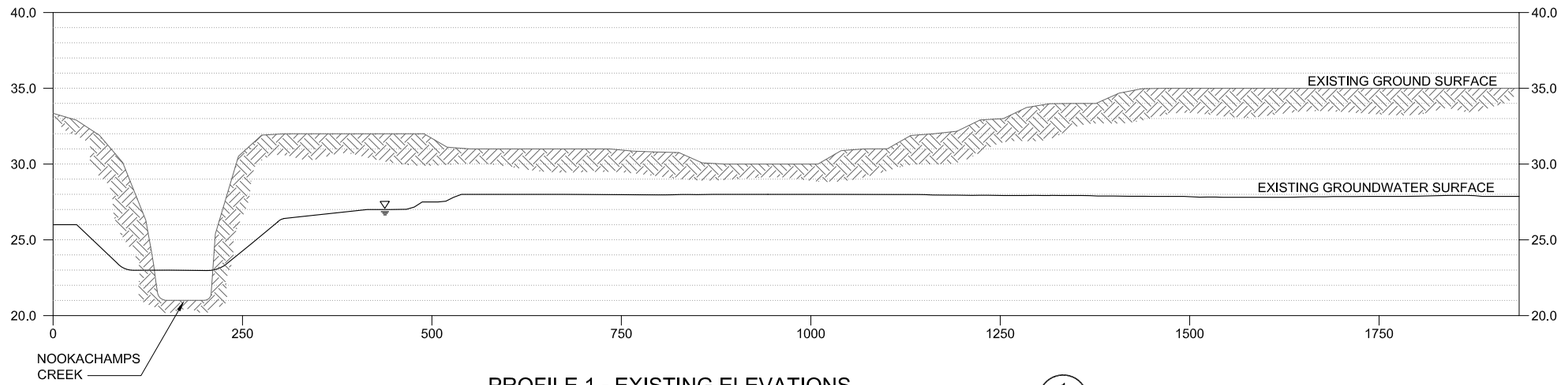

PROFILE 1 - EXISTING ELEVATIONS

1 / C-19

HORIZ. SCALE: 1"=100'
VERT. SCALE: 1"=5'

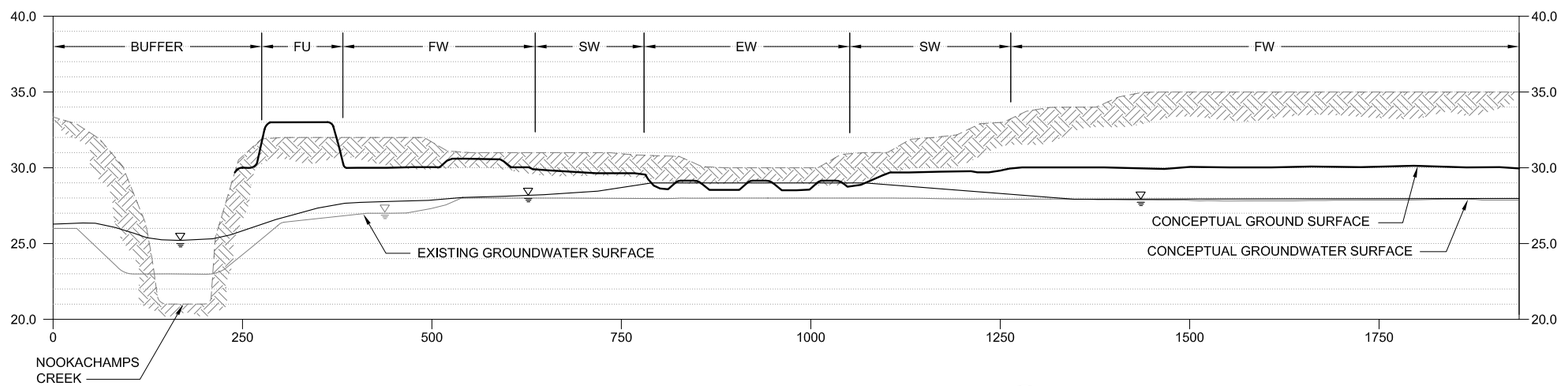

PROFILE 1 - CONCEPTUAL PHASE 2 ELEVATIONS

1 / C-19

HORIZ. SCALE: 1"=100'
VERT. SCALE: 1"=5'

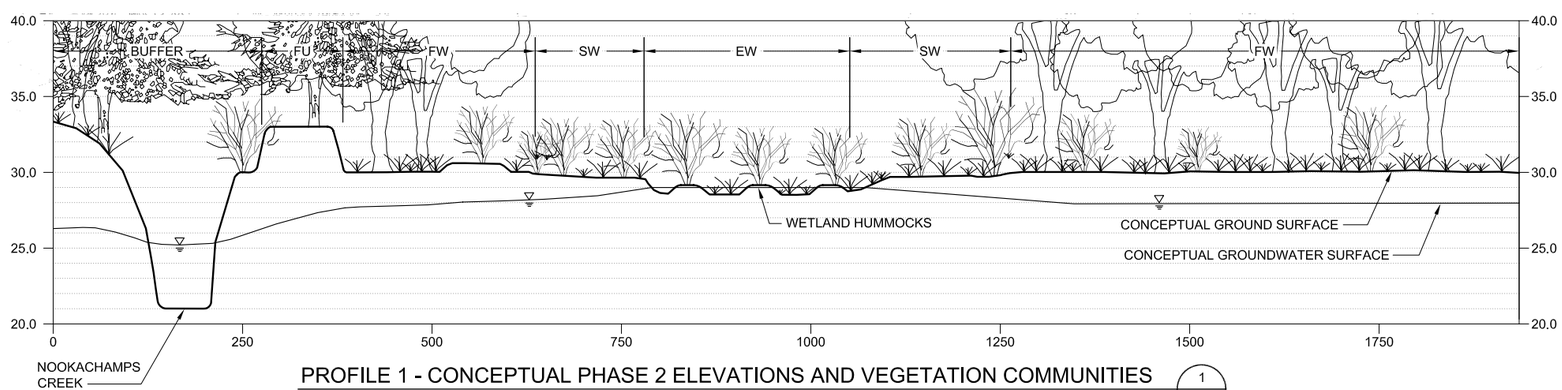

PROFILE 1 - CONCEPTUAL PHASE 2 ELEVATIONS AND VEGETATION COMMUNITIES

1 / C-19

HORIZ. SCALE: 1"=100'
VERT. SCALE: 1"=5'
VEGETATION: = N.T.S.

CONCEPTUAL VEGETATION LEGEND:

EW = EMERGENT WETLAND

SW = SCRUB-SHRUB WETLAND

FW = FORESTED WETLAND

FU = FORESTED UPLAND

NOTES:

1. GROUNDWATER SURFACE ELEVATIONS ARE BASED ON 2005/2006/2007 SECOND QUARTER GROUNDWATER ELEVATIONS (APRIL, MAY, AND JUNE).
2. ELEVATIONS REFERENCE DISTANCE IN FEET ABOVE MEAN SEA LEVEL, VERTICAL DATUM NAVD 88.
3. THE CONCEPTUAL WATER LEVELS ARE ESTIMATED BASED ON HYDRAULIC AND HYDROLOGIC MODELING; THE REVISED GRADING PLAN AFTER PHASE 1 WILL ENSURE THAT THE PROPER WETLAND HYDROLOGY IS MET FOR PROPOSED VEGETATION COMMUNITIES.

© 2007 Herrera Environmental, Inc. All rights reserved.

ONE INCH
AT FULL SIZE, IF NOT ONE INCH SCALE ACCORDINGLY

No.	REVISION	BY	APP'D	DATE
6	REVISION NO. 6	MRM	MS	2/08
5	REVISION NO. 5	MRM	MS	12/07
4	REVISION NO. 4	MRM	MS	9/07
3	REVISION NO. 3	MRM	MS	8/07
2	REVISION NO. 2	MRM	MS	6/06
1	REVISION NO. 1	MRM	MS	5/06

HERRERA ENVIRONMENTAL CONSULTANTS
2200 Sixth Avenue
Suite 1100
Seattle, Washington
98121-1820
206-441-9080
206-441-9108 FAX
http://www.herreralnc.com

DESIGNED: M. MERKELBACH
DRAWN: L. TURNIDGE
DESIGNED: -
DRAWN: -
DESIGNED: -
CHECKED: -
SCALE: AS NOTED
APPROVED: M. SPILLANE

SKAGIT ENVIRONMENTAL BANK
PHASE 2

GRADING PROFILES

DATE: FEBRUARY 2008
PROJECT NO: 04-02822-003
DRAWING NO: C-25
SHEET NO: 29 OF 46

Path: O:\proj\04-02822-003\Cad\Dwgs\Phase 1+2+3 Rev 6\C-25.dwg
Plot Date: 3/5/2008 3:56 PM Cad User: Wojciech Wieszczeciński
Plot Style Table: Herrera.ctb Plotter: Adobe PDF

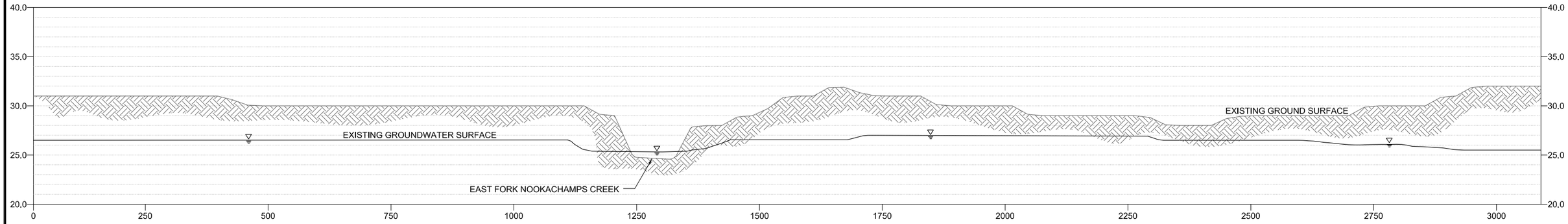

PROFILE 2 - EXISTING ELEVATIONS

2 / C-19

HORIZ. SCALE: 1"=100'
VERT. SCALE: 1"=5'

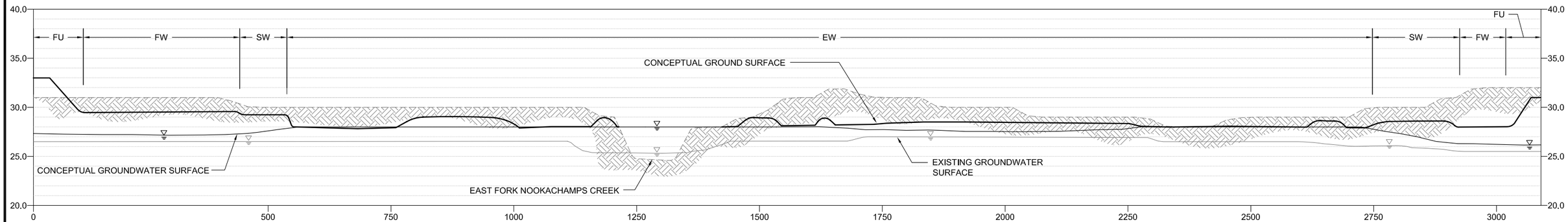

PROFILE 2 - CONCEPTUAL PHASE 2 ELEVATIONS

2 / C-19

HORIZ. SCALE: 1"=100'
VERT. SCALE: 1"=5'

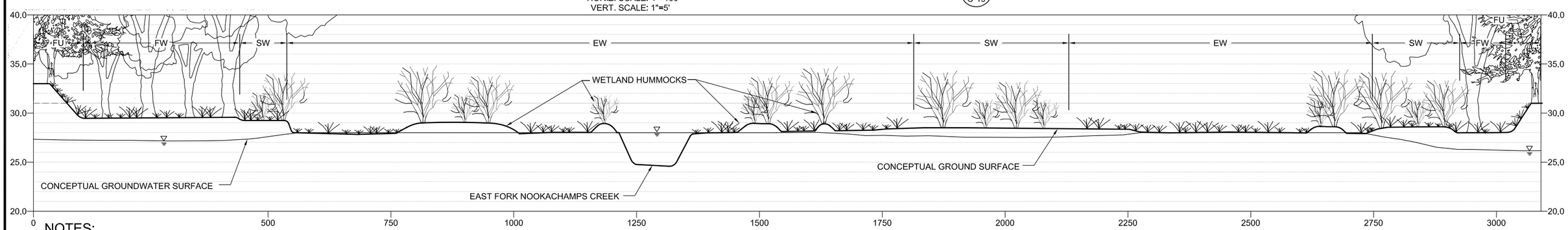

PROFILE 2 - CONCEPTUAL PHASE 2 ELEVATIONS AND VEGETATION COMMUNITIES

2 / C-19

HORIZ. SCALE: 1"=100'
VERT. SCALE: 1"=5'

NOTES:

1. GROUNDWATER SURFACE ELEVATIONS ARE BASED ON 2005/2006/2007 SECOND QUARTER GROUNDWATER ELEVATIONS (APRIL, MAY, AND JUNE).
2. ELEVATIONS REFERENCE DISTANCE IN FEET ABOVE MEAN SEA LEVEL, VERTICAL DATUM NAVD 88.
3. THE CONCEPTUAL WATER LEVELS ARE ESTIMATED BASED ON HYDRAULIC AND HYDROLOGIC MODELING; THE REVISED GRADING PLAN AFTER PHASE 1 WILL ENSURE THAT THE PROPER WETLAND HYDROLOGY IS MET FOR PROPOSED VEGETATION COMMUNITIES.

© 2007 Herrera Environmental, Inc. All rights reserved.

ONE INCH
AT FULL SIZE, IF NOT ONE INCH SCALE ACCORDINGLY

No.	REVISION	BY	APP'D	DATE
6	REVISION NO. 6	MRM	MS	2/08
5	REVISION NO. 5	MRM	MS	12/07
4	REVISION NO. 4	MRM	MS	9/07
3	REVISION NO. 3	MRM	MS	8/07
2	REVISION NO. 2	MRM	MS	6/06
1	REVISION NO. 1	MRM	MS	5/06

HERRERA ENVIRONMENTAL CONSULTANTS
2200 Sixth Avenue
Suite 1100
Seattle, Washington
98121-1820
206-441-9080
206-441-9108 FAX
http://www.herreralnc.com

DESIGNED: M. MERKELBACH
DRAWN: L. TURNIDGE
DESIGNED: -
DRAWN: -
DESIGNED: -
CHECKED: -
SCALE: AS NOTED
APPROVED: M. SPILLANE

SKAGIT ENVIRONMENTAL BANK
PHASE 2

GRADING PROFILES

DATE: FEBRUARY 2008
PROJECT NO: 04-02822-003
DRAWING NO: C-26
SHEET NO: 30 OF 46

Path: O:\proj\04-02822-003\Cad\Dwgs\Phase 1-2-3 Rev 6\C-26.dwg
Plot Date: 3/5/2008 3:57 PM Cad User: Wojciech Wieszczecinski
Plot Style Table: Herrera.ctb Plotter: Adobe PDF

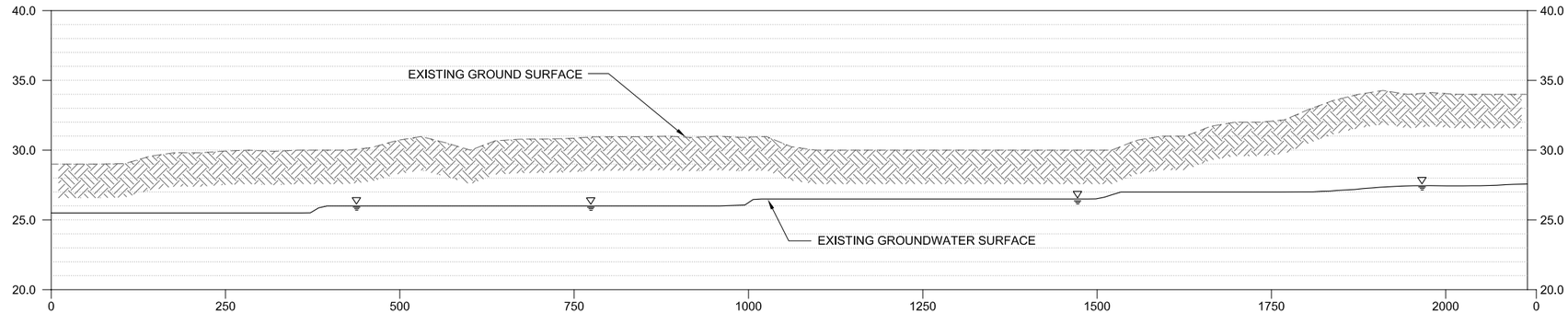

PROFILE 3 - EXISTING ELEVATIONS

3
C-19

HORIZ. SCALE: 1"=100'
VERT. SCALE: 1"=5'

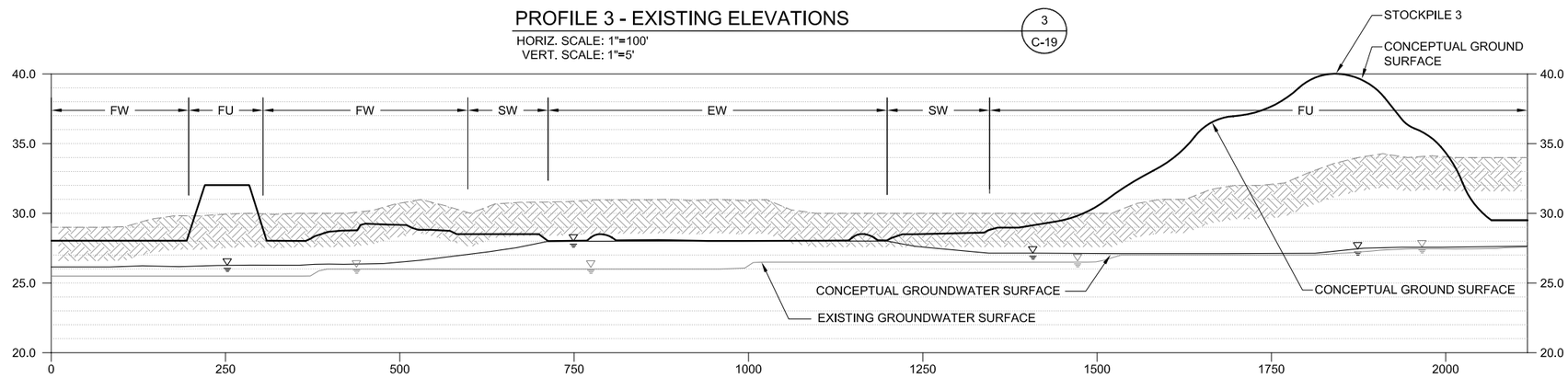

PROFILE 3 - CONCEPTUAL PHASE 2 ELEVATIONS

3
C-19

HORIZ. SCALE: 1"=100'
VERT. SCALE: 1"=5'

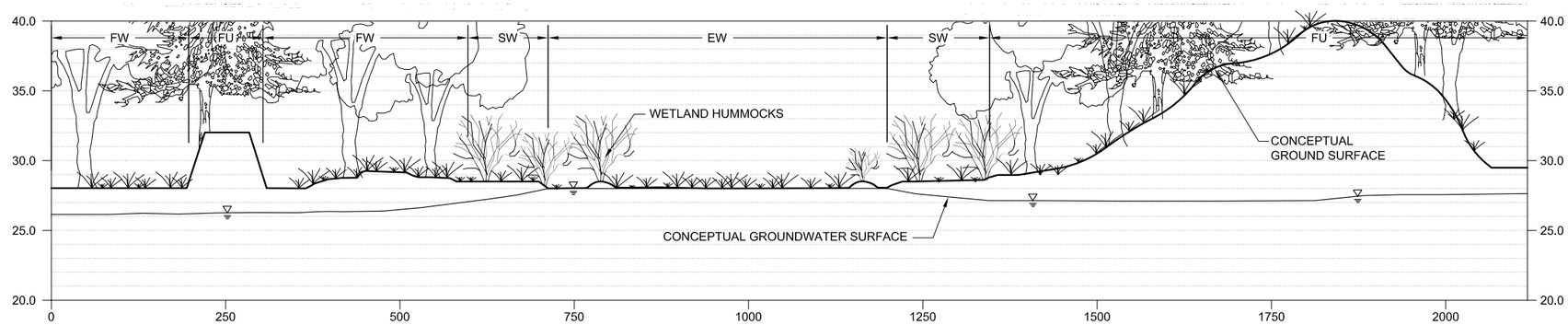

PROFILE 3 - CONCEPTUAL PHASE 2 ELEVATIONS AND VEGETATION COMMUNITIES

3
C-19

HORIZ. SCALE: 1"=100'
VERT. SCALE: 1"=5'

NOTES:

1. GROUNDWATER SURFACE ELEVATIONS ARE BASED ON 2005/2006/2007 SECOND QUARTER GROUNDWATER ELEVATIONS (APRIL, MAY, AND JUNE).
2. ELEVATIONS REFERENCE DISTANCE IN FEET ABOVE MEAN SEA LEVEL, VERTICAL DATUM NAVD 88.
3. THE CONCEPTUAL WATER LEVELS ARE ESTIMATED BASED ON HYDRAULIC AND HYDROLOGIC MODELING; THE REVISED GRADING PLAN AFTER PHASE 1 WILL ENSURE THAT THE PROPER WETLAND HYDROLOGY IS MET FOR PROPOSED VEGETATION COMMUNITIES.

© 2007 Herrera Environmental, Inc. All rights reserved.

ONE INCH
AT FULL SIZE, IF NOT ONE INCH SCALE ACCORDINGLY

No.	REVISION	BY	APP'D	DATE
6	REVISION NO. 6	MRM	MS	2/08
5	REVISION NO. 5	MRM	MS	12/07
4	REVISION NO. 4	MRM	MS	9/07
3	REVISION NO. 3	MRM	MS	8/07
2	REVISION NO. 2	MRM	MS	6/06
1	REVISION NO. 1	MRM	MS	5/06

HERRERA ENVIRONMENTAL CONSULTANTS
2200 Sixth Avenue
Suite 1100
Seattle, Washington
98121-1820
206-441-9080
206-441-9108 FAX
http://www.herreralnc.com

DESIGNED: M. MERKELBACH
DRAWN: L. TURNIDGE
DESIGNED: -
DRAWN: -
DESIGNED: -
CHECKED: -
SCALE: AS NOTED
APPROVED: M. SPILLANE

SKAGIT ENVIRONMENTAL BANK
PHASE 2

GRADING PROFILES

DATE: FEBRUARY 2008
PROJECT NO: 04-02822-003
DRAWING NO: C-27
SHEET NO: 31 OF 46

Path: O:\proj\04-02822-003\Cad\Dwgs\Phase 1-2-3 Rev 6\C-27.dwg
Plot Date: 3/5/2008 3:58 PM Cad User: Wojciech Wieszczecinski
Plot Style Table: Herrera.ctb Plotter: Adobe PDF

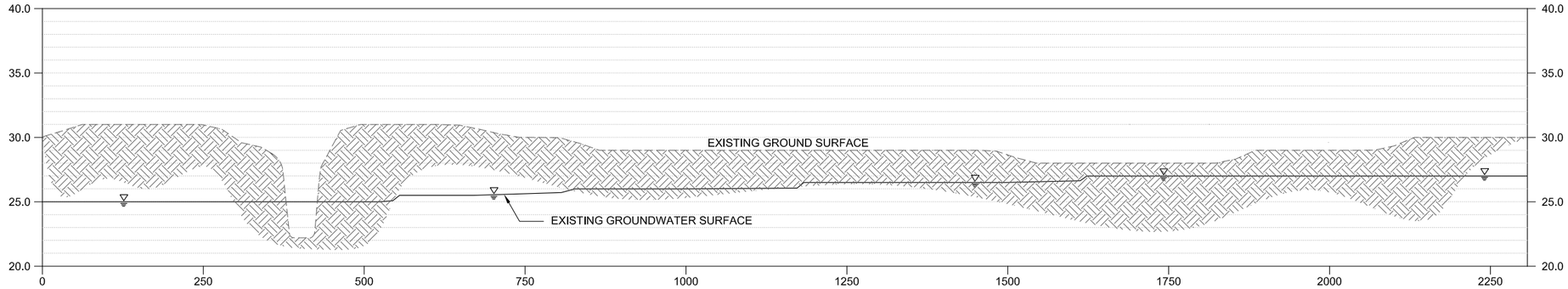

PROFILE 4 - EXISTING ELEVATIONS

4
C-19

HORIZ. SCALE: 1"=100'
VERT. SCALE: 1"=5'

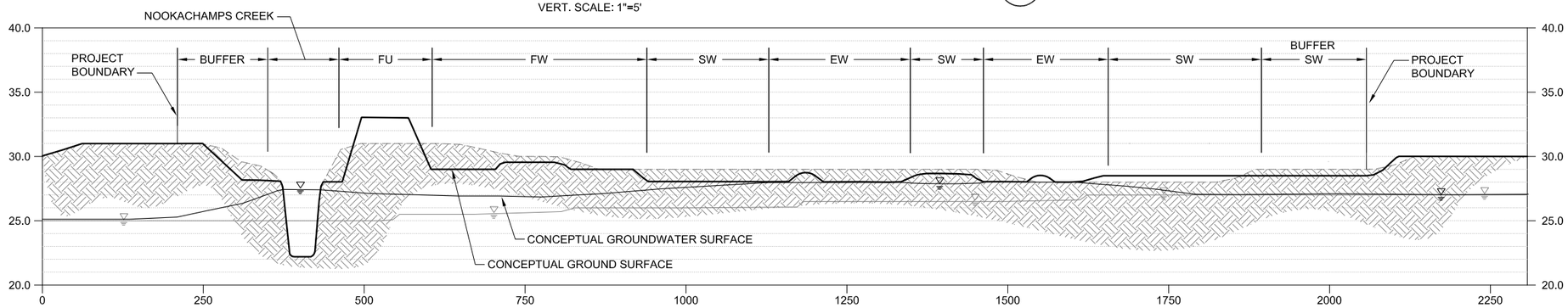

PROFILE 4 - CONCEPTUAL PHASE 2 ELEVATIONS

4
C-19

HORIZ. SCALE: 1"=100'
VERT. SCALE: 1"=5'

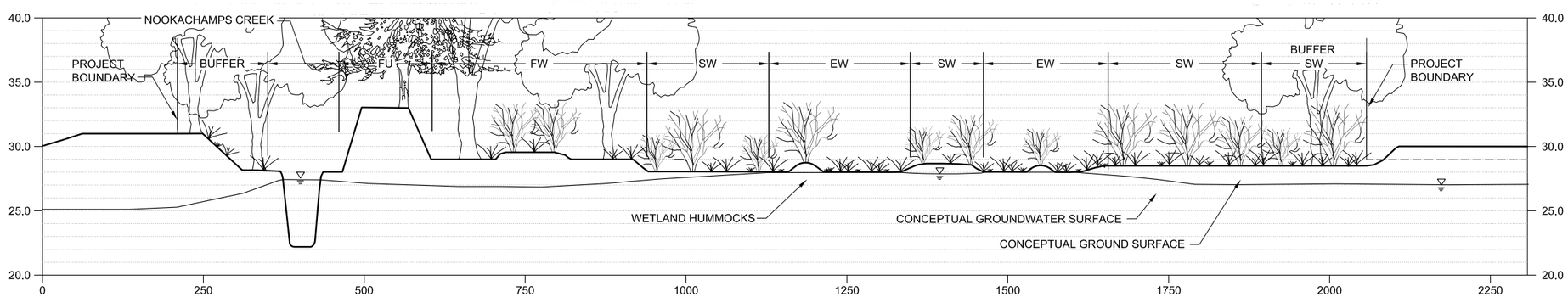

PROFILE 4 - CONCEPTUAL PHASE 2 ELEVATIONS AND VEGETATION COMMUNITIES

4
C-19

HORIZ. SCALE: 1"=100'
VERT. SCALE: 1"=5'

NOTES:

1. GROUNDWATER SURFACE ELEVATIONS ARE BASED ON 2005/2006/2007 SECOND QUARTER GROUNDWATER ELEVATIONS (APRIL, MAY, AND JUNE).
2. ELEVATIONS REFERENCE DISTANCE IN FEET ABOVE MEAN SEA LEVEL, VERTICAL DATUM NAVD 88.
3. THE CONCEPTUAL WATER LEVELS ARE ESTIMATED BASED ON HYDRAULIC AND HYDROLOGIC MODELING; THE REVISED GRADING PLAN AFTER PHASE 1 WILL ENSURE THAT THE PROPER WETLAND HYDROLOGY IS MET FOR PROPOSED VEGETATION COMMUNITIES.

© 2007 Herrera Environmental, Inc. All rights reserved.

ONE INCH
AT FULL SIZE, IF NOT ONE INCH SCALE ACCORDINGLY

No.	REVISION	BY	APP'D	DATE
6	REVISION NO. 6	MRM	MS	2/08
5	REVISION NO. 5	MRM	MS	12/07
4	REVISION NO. 4	MRM	MS	9/07
3	REVISION NO. 3	MRM	MS	8/07
2	REVISION NO. 2	MRM	MS	6/06
1	REVISION NO. 1	MRM	MS	5/06

HERRERA ENVIRONMENTAL CONSULTANTS
2200 Sixth Avenue
Suite 1100
Seattle, Washington
98121-1820
206-441-9080
206-441-9108 FAX
http://www.herreralnc.com

DESIGNED: M. MERKELBACH
DRAWN: L. TURNIDGE
DESIGNED: -
DRAWN: -
DESIGNED: -
CHECKED: -
SCALE: AS NOTED
APPROVED: M. SPILLANE

SKAGIT ENVIRONMENTAL BANK
PHASE 2

GRADING PROFILES

DATE: FEBRUARY 2008
PROJECT NO: 04-02822-003
DRAWING NO: C-28
SHEET NO: 32 OF 46

Path: O:\proj\04-02822-003\Cad\Dwgs\Phase 1-2-3 Rev 6\C-28.dwg
Plot Date: 3/5/2008 3:59 PM Cad User: Wojciech Wieszczecinski
Plot Style Table: Herrera.ctb Plotter: Adobe PDF

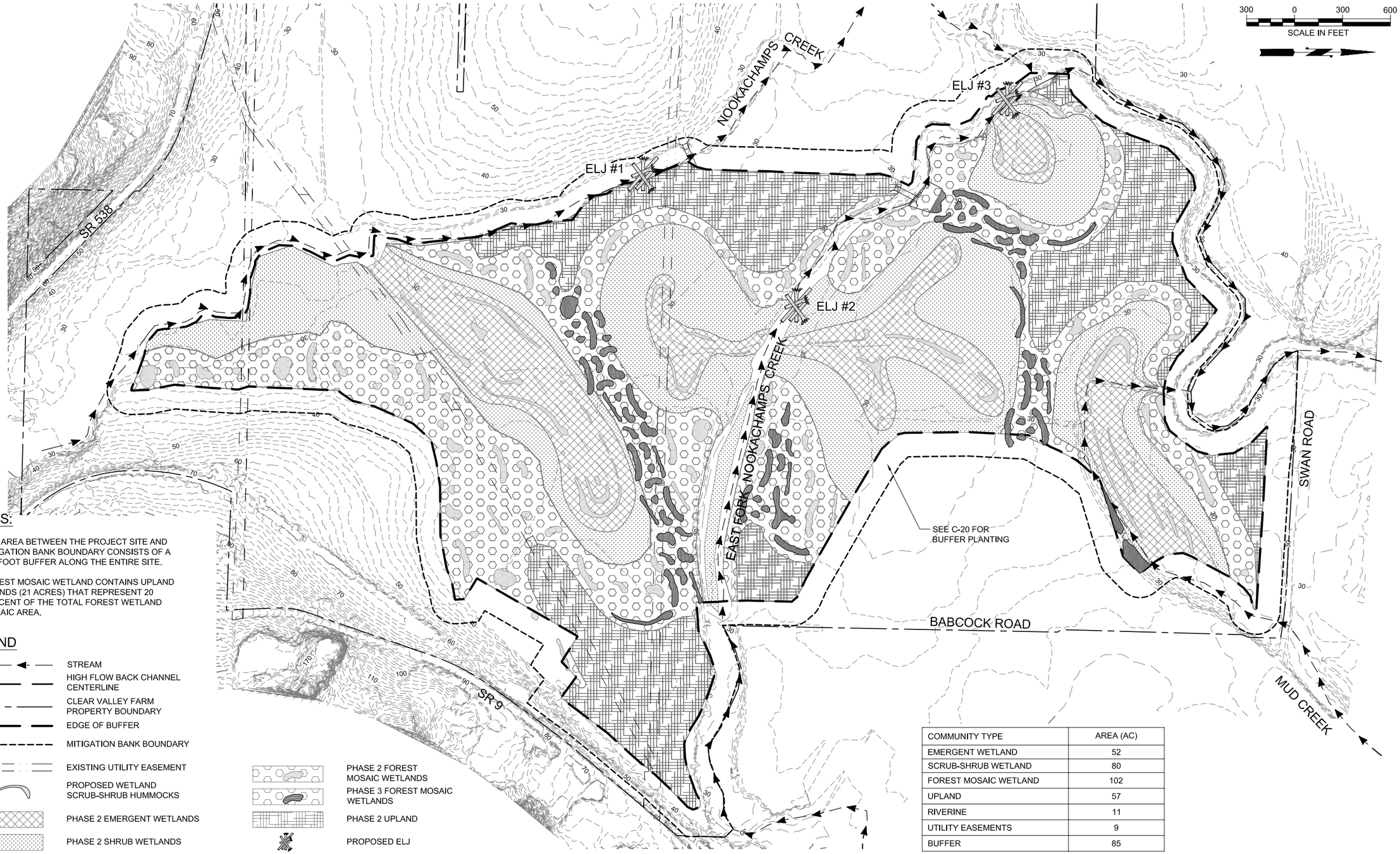

NOTES:

1. THE AREA BETWEEN THE PROJECT SITE AND MITIGATION BANK BOUNDARY CONSISTS OF A 150 FOOT BUFFER ALONG THE ENTIRE SITE.
2. FOREST MOSAIC WETLAND CONTAINS UPLAND ISLANDS (21 ACRES) THAT REPRESENT 20 PERCENT OF THE TOTAL FOREST WETLAND MOSAIC AREA.

LEGEND

- STREAM
- HIGH FLOW BACK CHANNEL CENTERLINE
- CLEAR VALLEY FARM PROPERTY BOUNDARY
- EDGE OF BUFFER
- MITIGATION BANK BOUNDARY
- EXISTING UTILITY EASEMENT
- PROPOSED WETLAND SCRUB-SHRUB HUMMOCKS
- PHASE 2 EMERGENT WETLANDS
- PHASE 2 SHRUB WETLANDS
- PHASE 2 FOREST MOSAIC WETLANDS
- PHASE 3 FOREST MOSAIC WETLANDS
- PHASE 2 UPLAND
- PROPOSED ELJ

COMMUNITY TYPE	AREA (AC)
EMERGENT WETLAND	52
SCRUB-SHRUB WETLAND	80
FOREST MOSAIC WETLAND	102
UPLAND	57
RIVERINE	11
UTILITY EASEMENTS	9
BUFFER	85
TOTAL:	396

ONE INCH
AT FULL SIZE, IF NOT ONE INCH SCALE ACCORDINGLY

© 2007 Herrera Environmental, Inc. All rights reserved.

No.	REVISION	BY	APP'D	DATE
6	REVISION NO. 6	MRM	MS	2/08
5	REVISION NO. 5	MRM	MS	12/07
4	REVISION NO. 4	MRM	MS	9/07
3	REVISION NO. 3	MRM	MS	8/07
2	REVISION NO. 2	MRM	MS	6/06
1	REVISION NO. 1	MRM	MS	5/06

HERRERA ENVIRONMENTAL CONSULTANTS
2200 Sixth Avenue
Suite 1100
Seattle, Washington
98121-1820
206-441-9080
206-441-9108 FAX
http://www.herreralnc.com

DESIGNED: C. BARTON
DRAWN: L. TURNIDGE
DESIGNED: -
DRAWN: -
DESIGNED: -
CHECKED: M. MERKELBACH
SCALE: AS NOTED
APPROVED: M. SPILLANE

SKAGIT ENVIRONMENTAL BANK
PHASE 3

PROPOSED PLANTING PLAN

DATE: FEBRUARY 2008
PROJECT NO: 04-02822-003
DRAWING NO: C-29
SHEET NO: 33 OF 46

Path: O:\proj\04-02822-003\Cad\Dwgs\Phase 1-2-3 Rev 6\C-29.dwg
Plot Date: 3/5/2008 3:59 PM Cad User: Wojciech Wieszczeciński
Plot Style Table: Herrera.ctb Plotter: Adobe PDF

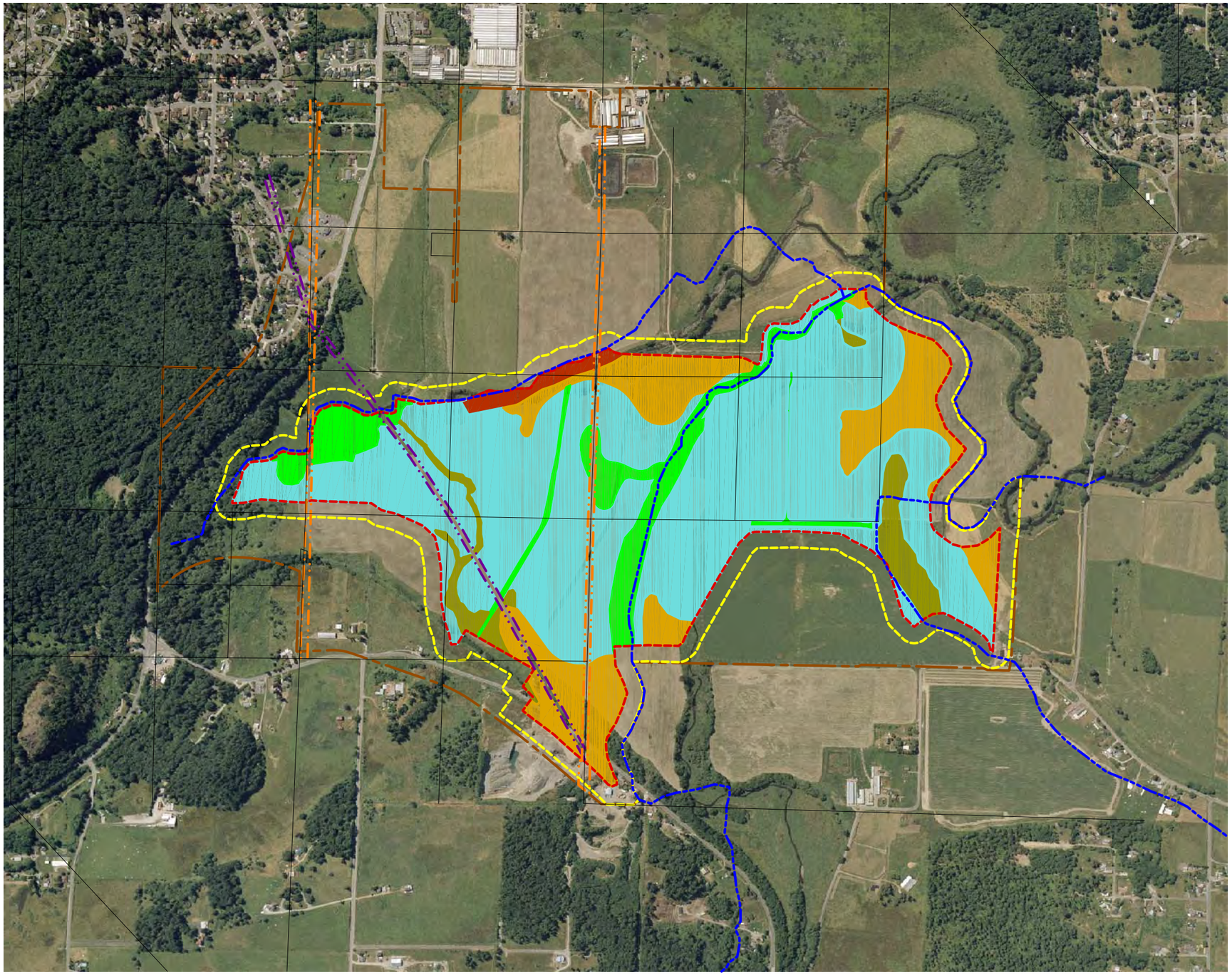

500 0 500 1000
SCALE IN FEET

LEGEND:

- STREAM
- PARCEL BOUNDARY
- WATER LINE EASEMENT
- POWER LINE EASEMENT
- ORIGINAL CLEAR VALLEY FARM PROPERTY BOUNDARY
- EDGE OF BUFFER
- MITIGATION BANK BOUNDARY
- REESTABLISHMENT
- REHABILITATION - REED CANARYGRASS
- REHABILITATION - PLOWED FIELDS
- RIPARIAN UPLAND
- UPLAND

NOTES:

1. THE FIGURE REPRESENTS THE TOTAL AMOUNT OF CREDITS GENERATED AFTER PHASE 3 ACTIVITIES.
2. CREDIT TOTALS DO NOT INCLUDE AREAS WITHIN UTILITY EASEMENTS.

	RATIO	AFFECTED ACRES	EASEMENT ACRES	CREDITS
REESTABLISHMENT	1:1	199.0	4.9	199.0
REHABILITATION				
PLOWED FIELDS	1:1.5	14.9	0.1	9.9
REED CANARYGRASS	1:1.5	31.2	1.0	20.8
RIPARIAN UPLAND	1:3	4.6	0.2	1.5
UPLAND	1:5	52.3	2.9	10.5
	TOTAL:	302.0	9.1	241.7

ONE INCH
AT FULL SIZE, IF NOT ONE INCH SCALE ACCORDINGLY

© 2007 Herrera Environmental, Inc. All rights reserved.

No.	REVISION	BY	APP'D	DATE
3	REVISION NO. 6	MRM	MS	02/08
2	REVISION NO. 5	MRM	MS	12/07
1	REVISION NO. 4	MRM	MS	09/07

HERRERA ENVIRONMENTAL CONSULTANTS
2200 Sixth Avenue
Suite 1100
Seattle, Washington
98121-1820
206-441-9080
206-441-9108 FAX
http://www.herreralnc.com

DESIGNED: M. MERKELBACH
DRAWN: L. TURNIDGE
DESIGNED: -
DRAWN: -
DESIGNED: -
CHECKED: -
SCALE: AS NOTED
APPROVED: M. SPILLANE

SKAGIT ENVIRONMENTAL BANK

CREDIT GENERATION PLAN

DATE: FEBRUARY 2008
PROJECT NO: 04-02822-003
DRAWING NO: C-30
SHEET NO: 34 OF 46

Path: O:\proj\04-02822-003\Cad\Dwgs\Phase 1-2-3 Rev 6\C-30.dwg
Plot Date: 3/5/2008 4:00 PM Cad User: Wojciech Wieszczecinski
Plot Style Table: Herrera-Color.ctb Plotter: Adobe PDF

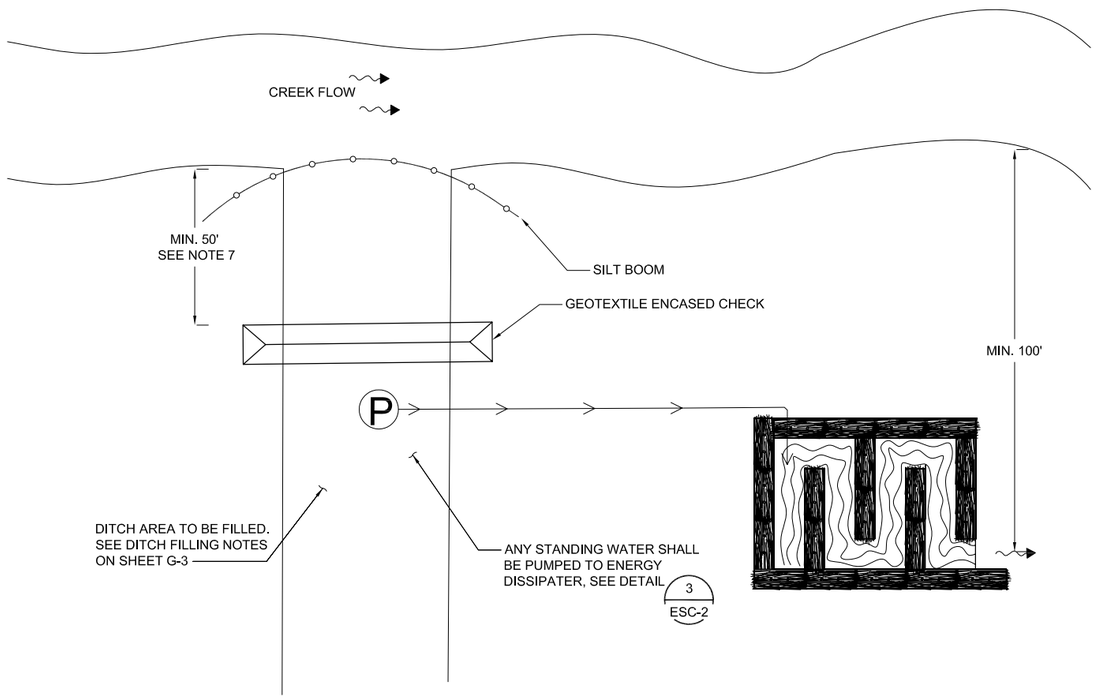

TYPICAL DITCH FILLING WATER MANAGEMENT DETAIL (1 / -)

SCALE: NTS

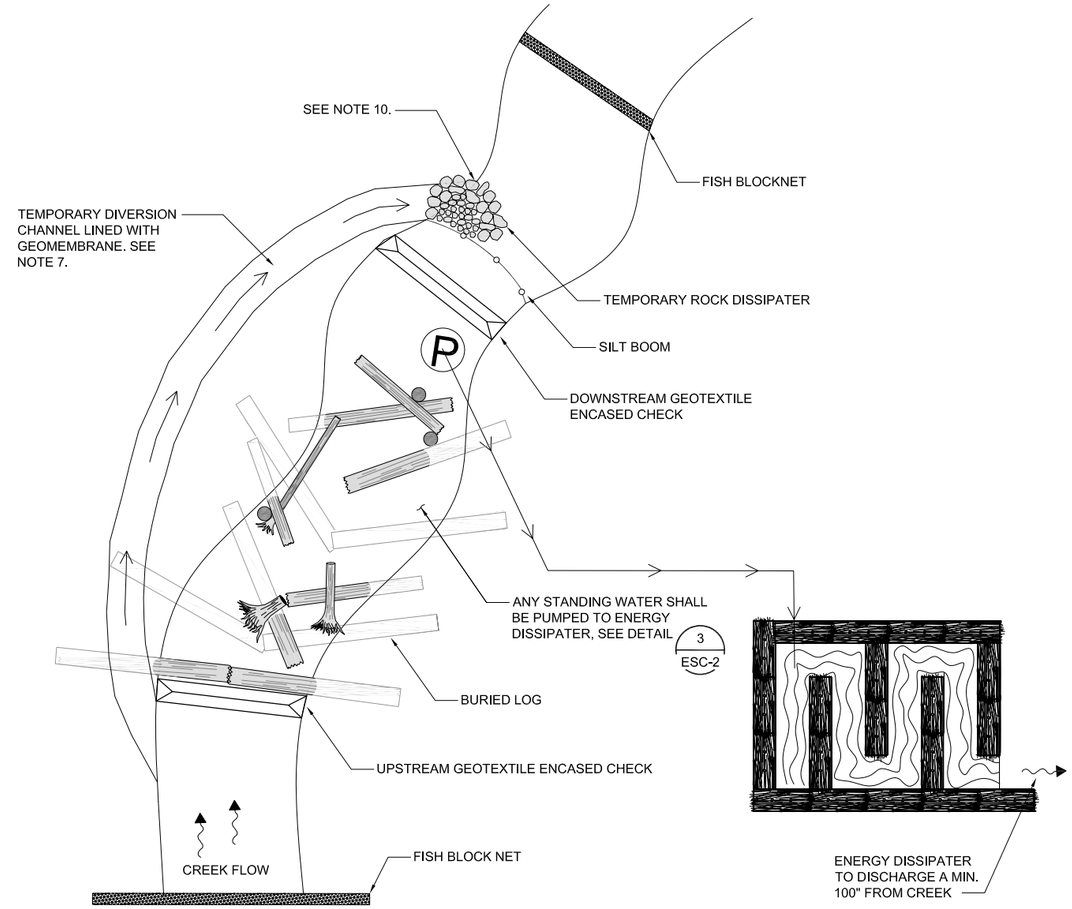

TYPICAL ELJ CONSTRUCTION WATER MANAGEMENT DETAIL (2 / -)

SCALE: NTS

DITCH DETAIL NOTES:

1. EXCAVATIONS THAT HAVE POTENTIAL TO IMPACT THE WETTED CHANNEL SHALL BE ISOLATED FROM THE ACTIVE CHANNEL BY THE CONTRACTOR. ISOLATION MEANS SHALL CONSIST OF SILT BOOMS, SHEET PILE, BULK BAGS, BLADDER DAMS, OR OTHERS AS NECESSARY TO PREVENT IMPACTS TO WATER QUALITY.
2. DEWATERING ACTIVITIES SHALL NOT IMPACT WATER QUALITY.
3. INSTALL TEMPORARY SILT BOOM TO ISOLATE DITCH OR WORK AREA AS SHOWN ON THE PLAN.
4. CONDUCT FISH REMOVAL (SEINING) IN PROPOSED WORK AREA PRIOR TO ANY EXCAVATION, GRADING, OR CONSTRUCTION OF INSTREAM STRUCTURES.
5. PUMP SURFACE WATER FROM DITCHES TO UPLAND AREAS FOR INFILTRATION PRIOR TO STRIPPING AND FILLING.
6. CONTRACTOR SHALL DEWATER EXCAVATIONS AS NECESSARY FOR CONSTRUCTION AND INSPECTION.
7. NO FILL MATERIAL WILL BE PLACED WITHIN 50 FEET OF DITCH FROM THE CONFLUENCE OF NOOKACHAMPS. CREEK EAST FORK NOOKACHAMPS CREEK, AND MUD CREEK (SEE R-6 AND R-7).
8. ANY CULVERT IN THE DITCHES THAT CAN NOT BE REMOVED WILL BE FILLED WITH NATIVE FILL.

STREAM DETAIL NOTES:

1. EXCAVATIONS THAT HAVE POTENTIAL TO IMPACT THE WETTED CHANNEL SHALL BE ISOLATED FROM THE ACTIVE CHANNEL BY THE CONTRACTOR. ISOLATION MEANS SHALL CONSIST OF SILT BOOMS, SHEET PILE, BULK BAGS, BLADDER DAMS, OR OTHERS AS NECESSARY TO PREVENT IMPACTS TO WATER QUALITY.
2. DEWATERING ACTIVITIES SHALL NOT IMPACT WATER QUALITY.
3. INSTALL TEMPORARY SILT BOOMS TO ISOLATE WORK AREA AS SHOWN ON THE PLAN.
4. CONDUCT FISH REMOVAL (SEINING) IN PROPOSED WORK AREA PRIOR TO ANY EXCAVATION, GRADING, OR CONSTRUCTION OF INSTREAM STRUCTURES.
5. INSTALL BLOCKNETS TO ISOLATE WORK AREA.
6. CONTRACTOR SHALL DEWATER AS NECESSARY FOR CONSTRUCTION AND INSPECTION.
7. STREAM DIVERSION SHALL BE ACCOMPLISHED BY EITHER PUMPING OR BY TEMPORARY CHANNEL DIVERSION.
8. CONTRACTOR SHALL SUBMIT A WATER MANAGEMENT PLAN 14 DAYS PRIOR TO ANY INSTREAM ACTIVITY FOR APPROVAL BY ENGINEER.
9. TEMPORARY CHANNEL DIVERSION SHALL BE LINED WITH GEOMEMBRANE TO LIMIT EROSION. TEMPORARY CHANNEL SHALL BE BACKFILLED AND COMPACTED FOLLOWING CONSTRUCTION.
10. CONSTRUCT HEAD CUT EROSION PREVENTION STRUCTURE AT COMPLETION OF WATER DIVERSION.

© 2007 Herrera Environmental, Inc. All rights reserved.

ONE INCH
AT FULL SIZE, IF NOT ONE INCH SCALE ACCORDINGLY

No.	REVISION	BY	APP'D	DATE
6	REVISION NO. 6	MRM	MS	2/08
5	REVISION NO. 5	MRM	MS	12/07
4	REVISION NO. 4	MRM	MS	9/07
3	REVISION NO. 3	MRM	MS	8/07
2	REVISION NO. 2	MRM	MS	6/06
1	REVISION NO. 1	MRM	MS	5/06

HERRERA ENVIRONMENTAL CONSULTANTS
2200 Sixth Avenue
Suite 1100
Seattle, Washington
98121-1820
206-441-9080
206-441-9108 FAX
http://www.herreralnc.com

DESIGNED: C. BARTON	DRAWN: L. TURNIDGE
DESIGNED: -	DRAWN: -
DESIGNED: -	CHECKED: M. MERKELBACH
SCALE: AS NOTED	APPROVED: M. SPILLANE

SKAGIT ENVIRONMENTAL BANK
PHASE 1

EROSION AND SEDIMENT CONTROL PLAN

DATE: FEBRUARY 2008
PROJECT NO: 04-02822-003
DRAWING NO: ESC-1
SHEET NO: 35 OF 46

Path: O:\proj\04-02822-003\Cad\Dwgs\Phase 1-2-3 Rev 6\ESC-1.dwg
Plot Date: 3/5/2008 4:01 PM Cad User: Wojciech Wieszczecinski
Plot Style Table: Herrera.ctb Plotter: Adobe PDF

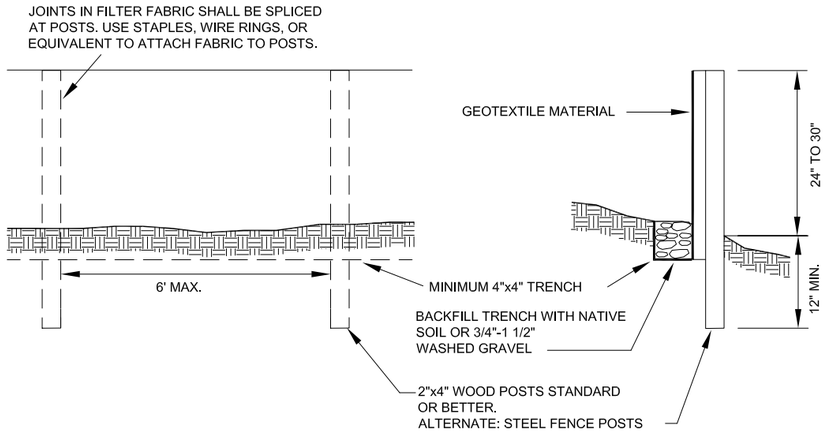

SILT FENCE ELEVATION DETAIL (1 / -)
SCALE: NTS

SILT FENCE STAKING DETAIL (2 / -)
SCALE: NTS

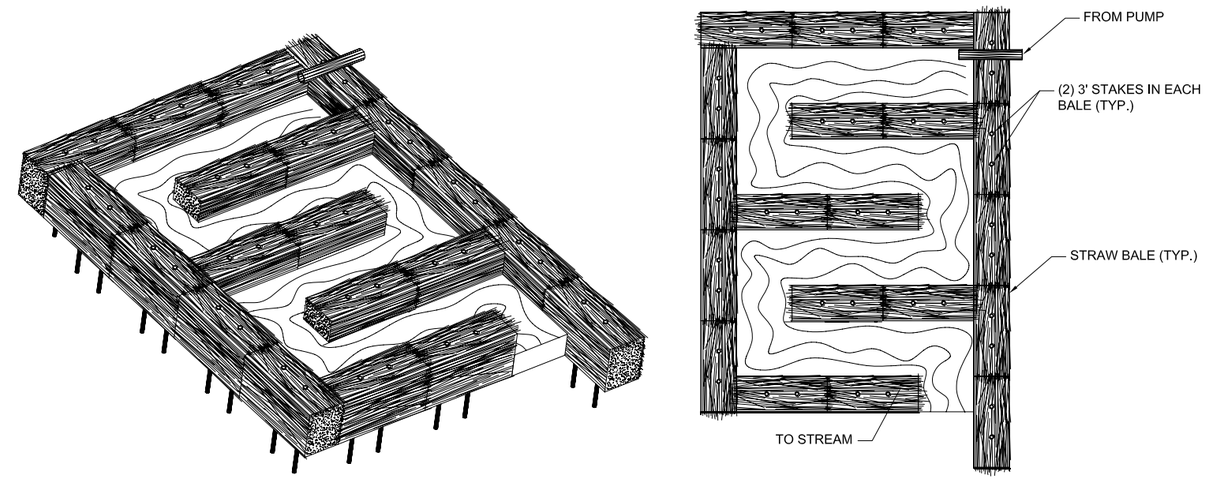

ENERGY DISSIPATER DETAIL (3 / -)
SCALE: NTS

EROSION AND SEDIMENT CONTROL NOTES:

1. APPROVAL OF THE CONTRACTOR'S TEMPORARY WATER AND SEDIMENT CONTROL PLAN DOES NOT CONSTITUTE AN APPROVAL OF PERMANENT ROAD OR DRAINAGE DESIGN (E.G., SIZE AND LOCATION OF ROADS, PIPES, RESTRICTORS, CHANNELS, RETENTION FACILITIES, UTILITIES, ETC.).
2. THE IMPLEMENTATION OF EROSION AND SEDIMENT CONTROL (ESC) PLANS AND THE CONSTRUCTION, MAINTENANCE, REPLACEMENT, AND UPGRADING OF ESC FACILITIES IS THE RESPONSIBILITY OF THE CONTRACTOR UNTIL ALL CONSTRUCTION IS APPROVED.
3. THE ESC FACILITIES SHOWN ON THIS PLAN MUST BE CONSTRUCTED PRIOR TO OR IN CONJUNCTION WITH ALL CLEARING AND GRADING SO AS TO ENSURE THAT THE TRANSPORT OF SEDIMENT TO SURFACE WATERS, DRAINAGE SYSTEMS, AND ADJACENT PROPERTIES IS MINIMIZED.
4. THE ESC FACILITIES SHOWN ON THIS PLAN ARE THE MINIMUM REQUIREMENTS FOR ANTICIPATED SITE CONDITIONS. DURING THE CONSTRUCTION PERIOD, THESE ESC FACILITIES SHALL BE UPGRADED AS NEEDED FOR UNEXPECTED STORM EVENTS AND MODIFIED TO ACCOUNT FOR CHANGING SITE CONDITIONS (E.G., ADDITIONAL SUMP PUMPS, RELOCATION OF DITCHES AND SILT FENCES, ETC.).
5. THE ESC FACILITIES SHALL BE INSPECTED DAILY BY THE CONTRACTOR'S ESC SUPERVISOR AND MAINTAINED TO ENSURE CONTINUED PROPER FUNCTIONING. WRITTEN RECORDS SHALL BE KEPT OF WEEKLY REVIEWS OF THE ESC FACILITIES.
6. ANY AREAS OF EXPOSED SOILS, INCLUDING EMBANKMENTS, THAT WILL NOT BE DISTURBED FOR SEVEN DAYS SHALL BE IMMEDIATELY STABILIZED WITH THE APPROVED ESC METHODS (E.G., SEEDING, MULCHING, PLASTIC COVERING, ETC.).
7. ANY AREA NEEDING ESC MEASURES THAT DO NOT REQUIRE IMMEDIATE ATTENTION SHALL BE ADDRESSED WITHIN SEVEN (7) DAYS.
8. THE ESC FACILITIES ON INACTIVE SITES SHALL BE INSPECTED AND MAINTAINED OR WITHIN TWENTY FOUR (24) HOURS FOLLOWING A STORM EVENT.
9. STABILIZED CONSTRUCTION ENTRANCES AND ROADS SHALL BE INSTALLED AT THE BEGINNING OF CONSTRUCTION AND MAINTAINED FOR THE DURATION OF THE PROJECT. ADDITIONAL MEASURES, SUCH AS WASH PADS, MAY BE REQUIRED TO ENSURE THAT ALL PAVED AREAS ARE KEPT CLEAN FOR THE DURATION OF THE PROJECT.
10. WHERE STRAW MULCH FOR TEMPORARY EROSION CONTROL IS REQUIRED, IT SHALL BE APPLIED AT A MINIMUM THICKNESS OF 2 TO 3 INCHES.
11. SURFACE ROUGHENING SHALL BE REQUIRED ON STOCKPILES WITH GRADES STEEPER THAN 3:1 AND TO A DEPTH OF 3 TO 4 INCHES PRIOR TO PLANTING OR SEEDING.
12. STOCKPILES WILL BE SEEDED AT THE END OF SEPTEMBER AND PLANTED IN THE WINTER WITH NATIVE SPECIES.
13. A TEMPORARY IRRIGATION SYSTEM OR WATER TRUCK MAY BE REQUIRED PER ENGINEER'S APPROVAL TO ESTABLISH A VEGETATIVE COVER ALONG ALL SLOPES OF THE STOCKPILES.

NOTES:

1. THE FILTER FABRIC (CONSTRUCTION GEOTEXTILE FOR TEMPORARY SILT FENCE) SHALL BE PURCHASED IN A CONTINUOUS ROLL, 5FT WIDE, CUT TO THE LENGTH OF THE BARRIER TO AVOID USE OF JOINTS. WHEN JOINTS ARE NECESSARY, THE FILTER FABRIC SHALL BE SPLICED TOGETHER ONLY AT A SUPPORT POST, WITH A MINIMUM 6 INCH OVERLAP, AND SECURELY FASTENED TO THE POST.
2. THE FENCE POSTS SHALL BE SPACED A MAXIMUM OF 6 FEET APART AND DRIVEN SECURELY INTO THE GROUND A MINIMUM OF 12 INCHES.
3. A TRENCH SHALL BE EXCAVATED A MINIMUM OF 4 INCHES WIDE BY 4 INCHES DEEP, UPSLOPE AND ADJACENT TO THE POST TO ALLOW THE FILTER FABRIC TO BE BURIED.
4. THE FILTER FABRIC SHALL BE STAPLED OR WIRED TO THE POSTS, AND 18 INCHES OF THE FABRIC SHALL BE EXTENDED INTO THE TRENCH. THE FABRIC SHALL NOT EXTEND MORE THAN 30 INCHES ABOVE THE ORIGINAL GROUND SURFACE. FILTER FABRIC SHALL NOT BE STAPLED TO TREES.
5. THE TRENCH SHALL BE BACKFILLED WITH NATIVE SOIL OR WITH 3/4"-1 1/2" WASHED GRAVEL.
6. SILT FENCES SHALL BE REMOVED AT DIRECTION OF ENGINEER, BUT NOT BEFORE THE UPSLOPE AREA HAS BEEN PERMANENTLY STABILIZED.
7. SILT FENCES SHALL BE INSPECTED IMMEDIATELY AFTER EACH RAINFALL EVENT AND AT LEAST DAILY DURING PROLONGED RAINFALL. ANY REQUIRED REPAIRS SHALL BE MADE IMMEDIATELY.
8. SILT FENCE PERFORMANCE SHALL BE EVALUATED AND SILT FENCE LOCATIONS SHALL BE EVALUATED AND ADJUSTED AS DIRECTED OR APPROVED BY THE ENGINEER AND THE PERMITTING AUTHORITY.
9. SILT FENCE SHALL BE INSTALLED AS SHOWN ON DRAWINGS.
10. ANY DEVIATION OR CHANGE TO SILT FENCE DETAILS MUST BE APPROVED BY AN INSPECTOR FOR SKAGIT COUNTY DDES.
11. THE CONTRACTOR SHALL MAINTAIN A COPY OF THE MANUFACTURER'S SPECIFICATIONS FOR FILTER FABRIC ON SITE.
12. MAINTENANCE STANDARDS:
    A. ANY DAMAGE SHALL BE REPAIRED IMMEDIATELY.
    B. IF CONCENTRATED FLOWS ARE EVIDENT UPHILL OF THE SILT FENCE, THEY MUST BE INTERCEPTED AND CONVEYED TO A SEDIMENT TRAP OR POND, OR OTHERWISE DIVERTED TO A LOCATION THAT DOES NOT RESULT IN TURBID DISCHARGES TO SURFACE WATERS.
    C. THE UPHILL SIDE OF THE SILT FENCE SHALL BE CHECKED FOR SIGNS OF THE SILT FENCE CLOGGING, ACTING AS A BARRIER TO FLOW, AND CAUSING CHANNELIZATION OF FLOWS PARALLEL TO THE FENCE. IF SUCH CHANNELIZATION OCCURS, THE CONTRACTOR SHALL REPLACE THE FENCE OR REMOVE THE TRAPPED SEDIMENT.
    D. SEDIMENT SHALL BE REMOVED AND PROPERLY DISPOSED OF WHEN THE SEDIMENT IS 6 INCHES HIGH.
    E. IF THE FILTER FABRIC HAS DETERIORATED DUE TO ULTRAVIOLET BREAKDOWN, IT SHALL BE REPLACED.

© 2007 Herrera Environmental, Inc. All rights reserved.

ONE INCH
AT FULL SIZE, IF NOT ONE INCH SCALE ACCORDINGLY

No.	REVISION	BY	APP'D	DATE
6	REVISION NO. 6	MRM	MS	2/08
5	REVISION NO. 5	MRM	MS	12/07
4	REVISION NO. 4	MRM	MS	9/07
3	REVISION NO. 3	MRM	MS	8/07
2	REVISION NO. 2	MRM	MS	6/06
1	REVISION NO. 1	MRM	MS	5/06

HERRERA ENVIRONMENTAL CONSULTANTS
2200 Sixth Avenue
Suite 1100
Seattle, Washington
98121-1820
206-441-9080
206-441-9108 FAX
http://www.herreralnc.com

DESIGNED: C. BARTON
DRAWN: L. TURNIDGE
DESIGNED: -
DRAWN: -
DESIGNED: -
CHECKED: M. MERKELBACH
SCALE: AS NOTED
APPROVED: M. SPILLANE

SKAGIT ENVIRONMENTAL BANK
PHASE 1

EROSION AND SEDIMENT CONTROL DETAILS

DATE: FEBRUARY 2008
PROJECT NO: 04-02822-003
DRAWING NO: ESC-2
SHEET NO: 36 OF 46

Path: O:\proj\04-02822-003\Cad\Dwgs\Phase 1-2-3 Rev 6\ESC-2.dwg
Plot Date: 3/5/2008 4:02 PM Cad User: Wojciech Wieszczeciński
Plot Style Table: Herrera.ctb Plotter: Adobe PDF

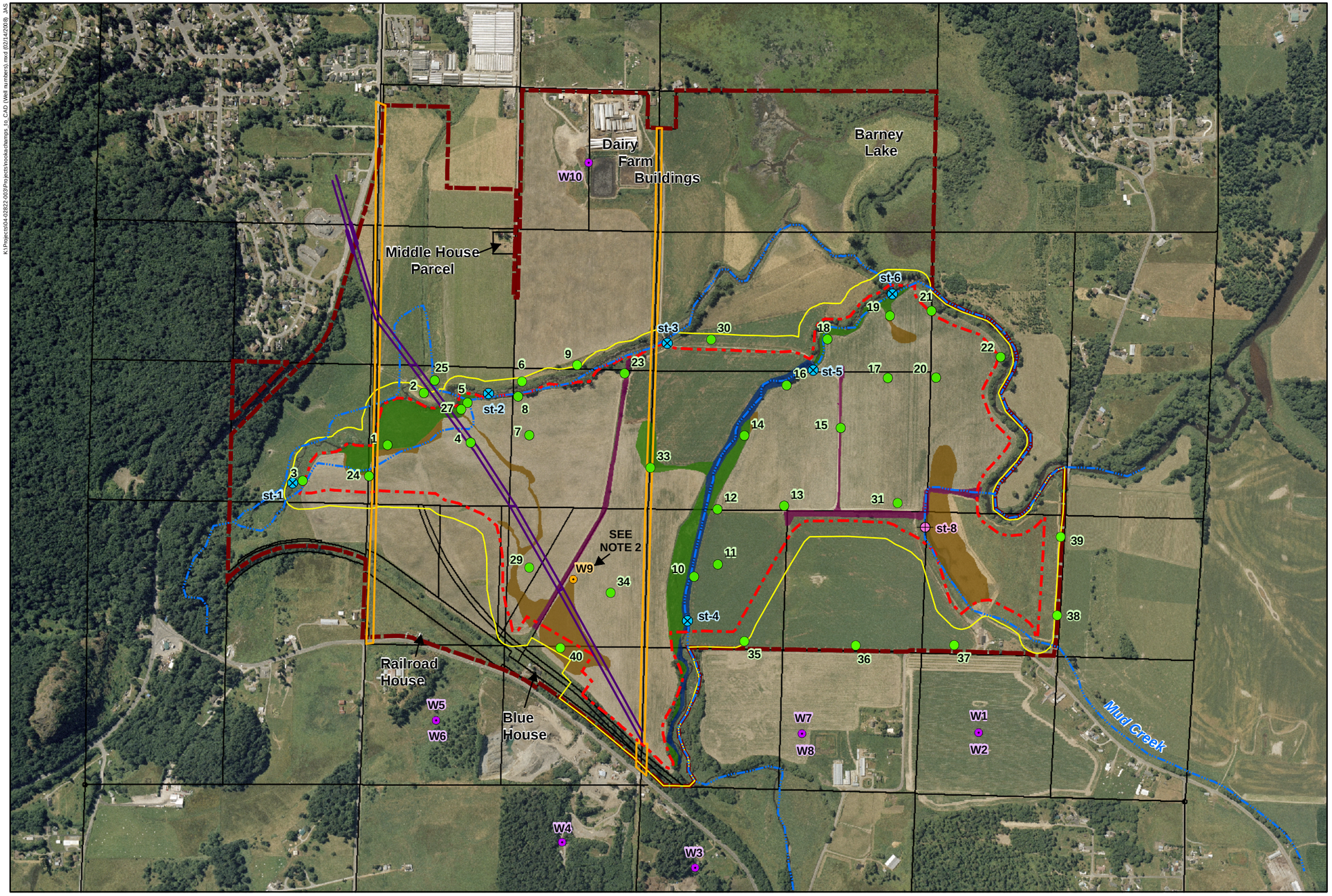

0 450 900 1,800 ft

1 in = 1000 ft

N

Legend :

- 23 — Well location and number
- W1 — Offsite well location
- st-1 — Staff gauge location
- st-8 — Proposed staff gauge location
- Stream
- Waterline easement
- Powerline easement
- Mitigation bank boundary
- Clear Valley Farm property boundary
- Edge of buffer
- Parcel boundary

Existing wetlands

- Palustrine: persistent
- Palustrine: non-persistent and plowed
- Palustrine: ditch
- Riverine

Note:

1. **Offsite wells are not part of Skagit Environmental Bank.**
2. **Well W9 is an abandoned irrigation well from the previous land owner.**
3. **Information on onsite and offsite wells can be found in Appendix 3 of the *Skagit Environmental Bank Response to Skagit County and Public Comments.***

© 2006 Herrera Environmental, Inc. All rights reserved.

K:\Projects\04-02822-003\Projects\nookachamps_to_CAD (Well numbers).mxd (02/14/2008) JAS

No.	REVISION	BY	APPD	DATE
6	REVISION NO. 6	MM	MS	02/08
5	REVISION NO. 5	MM	MS	12/07
4	REVISION NO. 4	MM	MS	09/07
3	REVISION NO. 3	MM	MS	07/07

HERRERA ENVIRONMENTAL CONSULTANTS
2200 Sixth Avenue
Suite 1100
Seattle, Washington
98121-1820
206-441-9080
206-441-9108 FAX

DESIGNED: M. MERKELBACH
DRAWN: J. SCHMIDT
DESIGNED:
DRAWN:
DESIGNED:
CHECKED:
DESIGNED:
APPROVED: M. SPILLANE

SKAGIT ENVIRONMENTAL BANK

WELL LOCATIONS AND STAFF GAUGE LOCATIONS (INDICATING WELL NUMBER)

DATE: FEBRUARY 2008
PROJECT NO: 04-02822-003
DRAWING NO: R-1
SHEET NO: 37 of 46

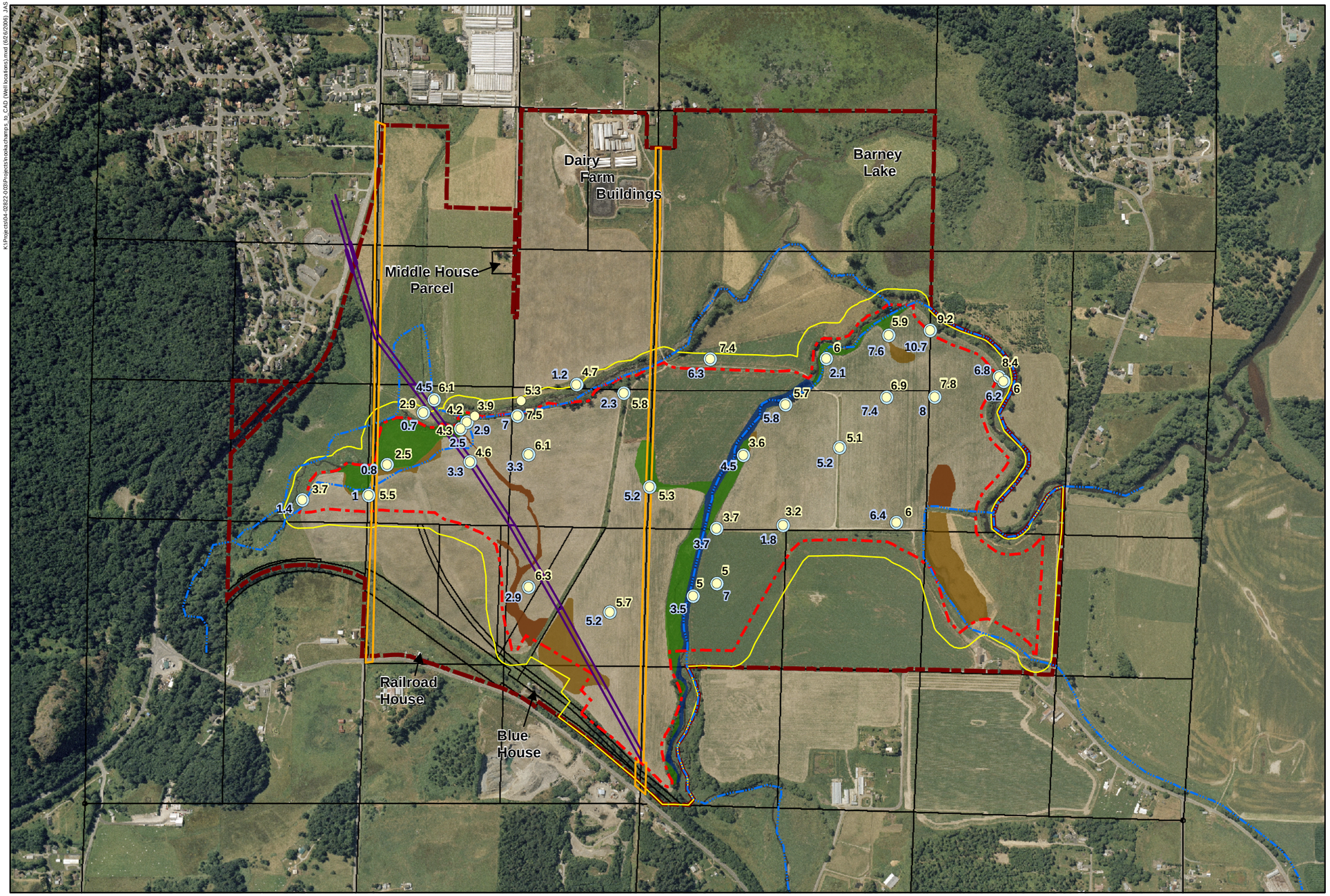

Legend :

- 7.6 Ground water depth - second quarter 2005 (ft)
- 7.6 Ground water depth - third quarter 2005 (ft)
- Stream
- Waterline easement
- Powerline easement
- Mitigation bank boundary
- Clear Valley Farm property boundary
- Edge of buffer
- Parcel boundary

Existing wetlands

- Palustrine: persistent
- Palustrine: non-persistent and plowed
- Palustrine: ditch
- Riverine

© 2006 Herrera Environmental, Inc. All rights reserved.

No.	REVISION	BY	APPD	DATE
6	REVISION NO.6	MM	MS	02/08
5	REVISION NO.5	MM	MS	12/07
4	REVISION NO.4	MM	MS	09/07
3	REVISION NO.3	MM	MS	07/07

HERRERA ENVIRONMENTAL CONSULTANTS
2200 Sixth Avenue
Suite 1100
Seattle, Washington
98121-1820
206-441-9080
206-441-9108 FAX

DESIGNED: M. MERKELBACH
DRAWN: J. SCHMIDT
DESIGNED:
DRAWN:
DESIGNED:
CHECKED:
DESIGNED:
APPROVED: M. SPILLANE

SKAGIT ENVIRONMENTAL BANK

WELL DEPTH TO GROUNDWATER (SECOND AND THIRD QUARTER 2005)

DATE: FEBRUARY 2008
PROJECT NO: 04-02822-003
DRAWING NO: R-2A
SHEET NO: 38 of 46

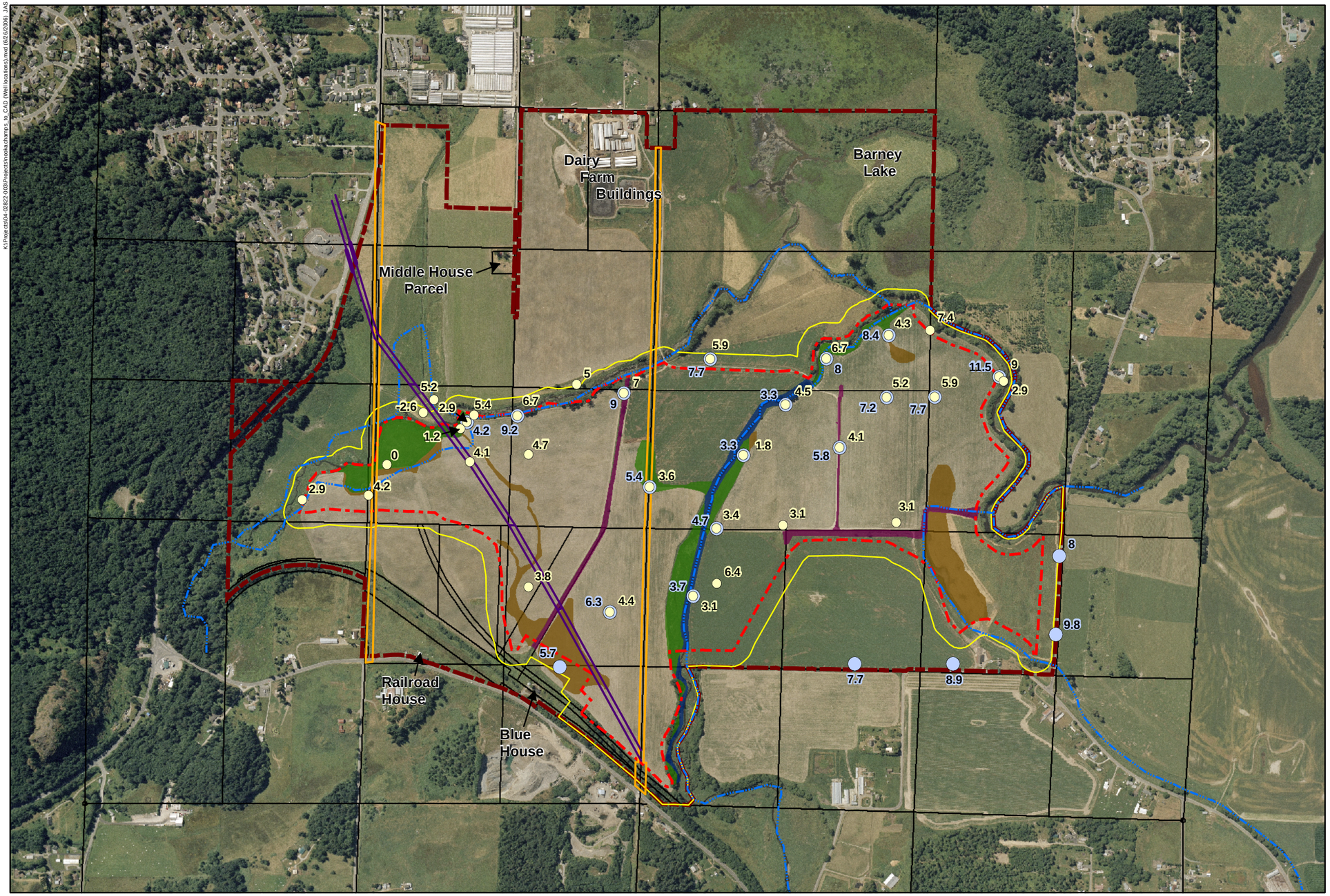

Legend :

- 7.6 Ground water depth - second quarter 2006 (ft)
- 7.6 Ground water depth - third quarter 2006 (ft)
- Stream
- Waterline easement
- Powerline easement
- Mitigation bank boundary
- Clear Valley Farm property boundary
- Edge of buffer
- Parcel boundary

Existing wetlands

- Palustrine: persistent
- Palustrine: non-persistent and plowed
- Palustrine: ditch
- Riverine

© 2006 Herrera Environmental, Inc. All rights reserved.

No.	REVISION	BY	APPD	DATE
6	REVISION NO.6	MM	MS	02/08
5	REVISION NO.5	MM	MS	12/07
4	REVISION NO.4	MM	MS	07/07
3	REVISION NO.3	MM	MS	07/07

HERRERA ENVIRONMENTAL CONSULTANTS
2200 Sixth Avenue
Suite 1100
Seattle, Washington
98121-1820
206-441-9080
206-441-9108 FAX

DESIGNED: M. MERKELBACH
DRAWN: J. SCHMIDT
DESIGNED:
DRAWN:
DESIGNED:
CHECKED:
DESIGNED:
APPROVED: M. SPILLANE

SKAGIT ENVIRONMENTAL BANK

WELL DEPTH TO GROUNDWATER (SECOND AND THIRD QUARTER 2006)

DATE: FEBRUARY 2008
PROJECT NO: 04-02822-003
DRAWING NO: R-2B
SHEET NO: 39 of 43

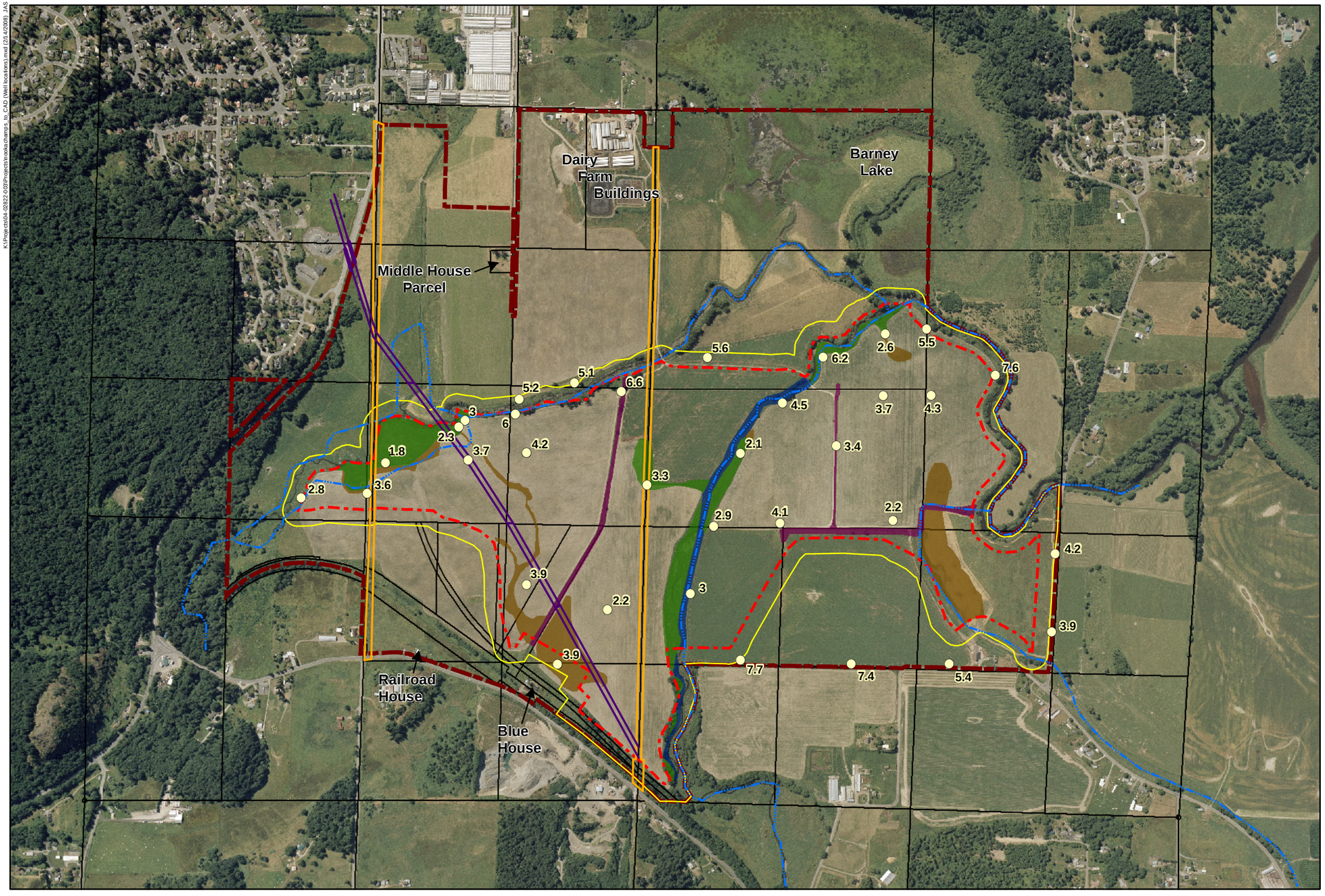

0 450 900 1,800 ft

1 in = 1000 ft

N

Legend :

- 7.6 Ground water depth - second quarter 2006 (ft)
- Stream
- Waterline easement
- Powerline easement
- Mitigation bank boundary
- Clear Valley Farm property boundary
- Edge of buffer
- Parcel boundary

Existing wetlands

- Palustrine: persistent
- Palustrine: non-persistent and plowed
- Palustrine: ditch
- Riverine

© 2006 Herrera Environmental. Inc. All rights reserved.

K:\Projects\04-02822-003\Projects\rookachamps_to_CAD (Well locations).mxd (2/14/2008) JAS

No.	REVISION	BY	APPD	DATE
6	REVISION NO.6	MM	MS	02/08
5	REVISION NO.5	MM	MS	12/07
4	REVISION NO.4	MM	MS	09/07
3	REVISION NO.3	MM	MS	07/07

HERRERA ENVIRONMENTAL CONSULTANTS
2200 Sixth Avenue
Suite 1100
Seattle, Washington
98121-1820
206-441-9080
206-441-9108 FAX

DESIGNED: M. MERKELBACH
DRAWN: J. SCHMIDT
DESIGNED:
DRAWN:
DESIGNED:
CHECKED:
DESIGNED:
APPROVED: M. SPILLANE

SKAGIT ENVIRONMENTAL BANK

WELL DEPTH TO GROUNDWATER (SECOND QUARTER 2007)

DATE: FEBRUARY 2008
PROJECT NO: 04-02822-003
DRAWING NO: R-2C
SHEET NO: 40 of 46

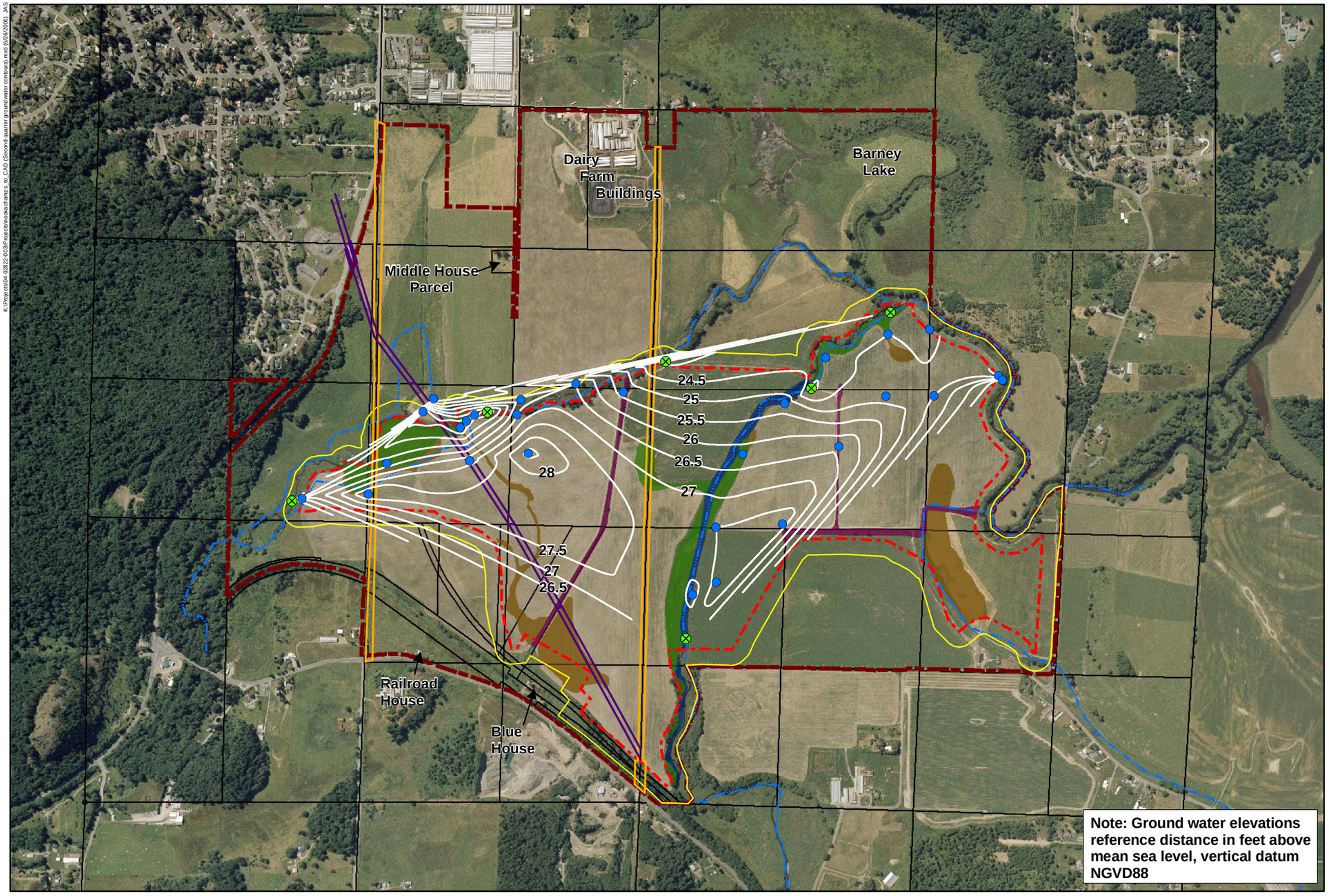

0 450 900 1,800 ft

1 in = 1000 ft

N

Legend :

- Well location
- Staff gauge location
- 27.5 Ground water elevation contour (0.5 foot interval)
- Stream
- Waterline easement
- Powerline easement
- Wetland bank boundary
- Property boundary
- Edge of buffer
- Parcel boundary

Existing wetlands

- Palustrine: persistent
- Palustrine: non-persistent and plowed
- Palustrine: ditch
- Riverine

© 2006 Herrera Environmental, Inc. All rights reserved.

K:\Projects\04-02822-003\Projects\rookachamps_to_CAD (Second quarter groundwater contours).mxd (6/26/2006) JAS

No.	REVISION	BY	APPD	DATE
6	REVISION NO.6	MS		02/08
5	REVISION NO.5	MS		12/07
4	REVISION NO.4	MS		09/07
3	REVISION NO.3	MS		07/07

HERRERA ENVIRONMENTAL CONSULTANTS
2200 Sixth Avenue
Suite 1100
Seattle, Washington
98121-1820
206-441-9080
206-441-9108 FAX

DESIGNED: M. MERKELBACH
DRAWN: J. SCHMIDT
DESIGNED:
DRAWN:
DESIGNED:
CHECKED:
DESIGNED:
APPROVED: M. SPILLANE

SKAGIT ENVIRONMENTAL BANK

GROUND WATER CONTOURS (SECOND QUARTER 2005/2006/2007)

DATE: FEBRUARY 2008
PROJECT NO: 04-02822-003
DRAWING NO: R-3
SHEET NO: 41 of 46

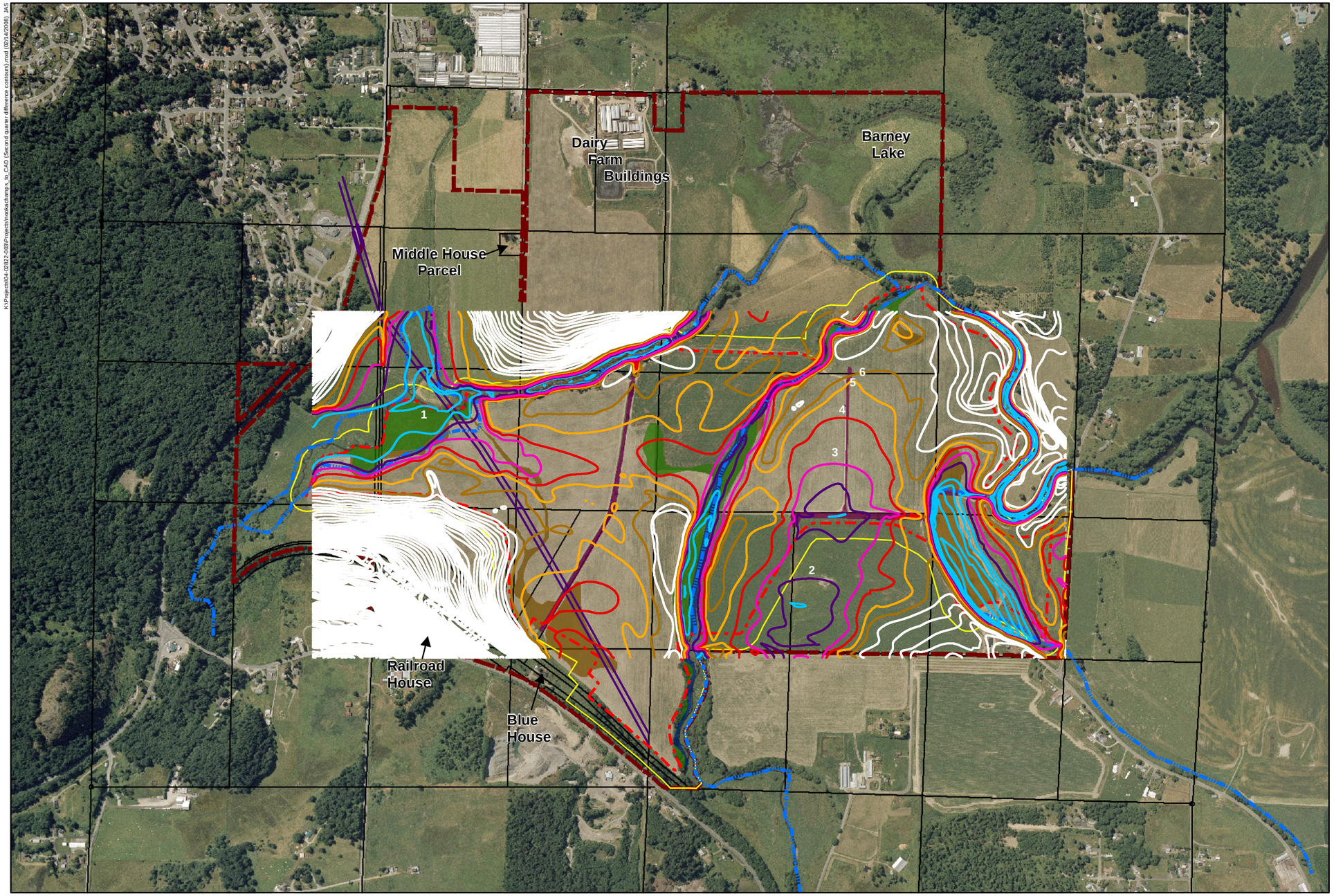

0 500 1,000 2,000 ft

1 in = 1000 ft

N

Legend :

Depth to ground water from surface (in feet)

- 0 - 1
- 1 -2
- 2 - 3
- 3 - 4
- 4 - 5
- 5 - 6
- > 6
- Stream
- Waterline easement
- Mitigation bank boundary
- Clear Valley Farm property boundary
- Edge of buffer
- Parcel boundary

Existing wetlands

- Palustrine: persistent
- Palustrine: non-persistent and plowed
- Palustrine: ditch
- Riverine

© 2006 Herrera Environmental, Inc. All rights reserved.

K:\Projects\04-02822-003\Projects\nooksack\champs_tb_CAD (Second quarter difference contours).mxd (02/14/2008) JAS

No.	REVISION	BY	APPD	DATE
6	REVISION NO.6	MM	MS	02/08
5	REVISION NO.5	MM	MS	12/07
4	REVISION NO.4	MM	MS	09/07
3	REVISION NO.3	MM	MS	07/07

HERRERA ENVIRONMENTAL CONSULTANTS
2200 Sixth Avenue
Suite 1100
Seattle, Washington
98121-1820
206-441-9080
206-441-9108 FAX

DESIGNED: M. MERKELBACH
DRAWN: J. SCHMIDT
DESIGNED:
DRAWN:
DESIGNED:
CHECKED:
DESIGNED:
APPROVED: M. SPILLANE

SKAGIT ENVIRONMENTAL BANK

DIFFERENCE BETWEEN GROUND SURFACE AND GROUND WATER ELEVATIONS (SECOND QUARTER 2005/2006/2007)

DATE: FEBRUARY 2008
PROJECT NO: 04-02822-003
DRAWING NO: R-4
SHEET NO: 42 of 46

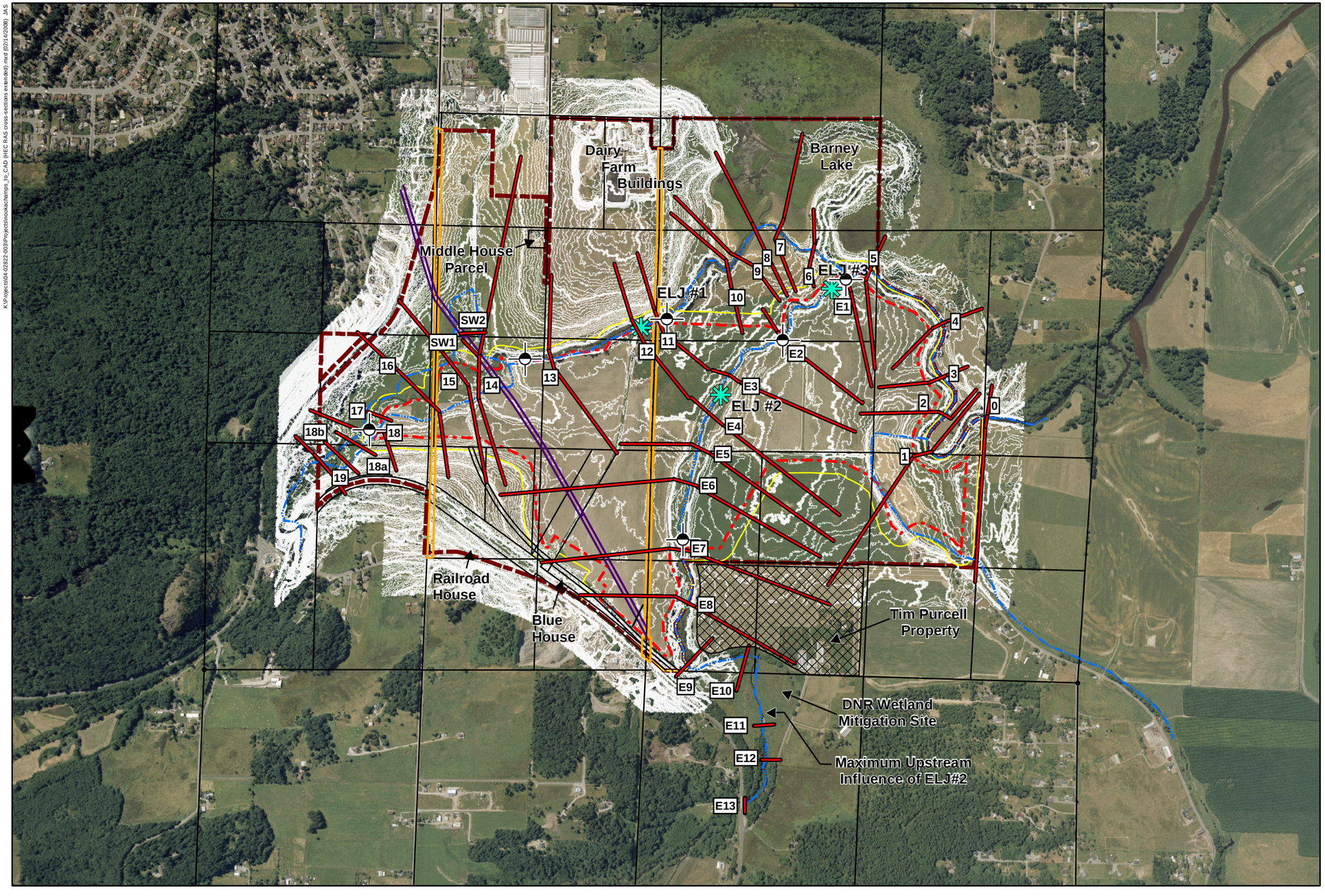

0 625 1,250 2,500 ft

1 in = 1250 ft

N

Legend :

- Proposed Engineered logjam (ELJ)
- Stream
- Water line easement
- Power line easement
- Mitigation bank boundary
- Clear Valley Farm property boundary
- Edge of buffer
- Parcel boundary
- Stream gauge
- E1 HEC-RAS cross-section location
- 10-foot contours
- 1 foot contours

Notes:

1. **Updated hydraulic analysis is found in the Skagit Environmental Bank Response to Skagit County on Public Comments (2007).**

© 2006 Herrera Environmenta Consultants, Inc. All rights reserved.

K:\Projects\04-02822-003\Projects\nooksack\ramps_to_CAD (HEC RAS cross-sections extended).mxd (02/14/2008) JAS

No.	REVISION	BY	APPD	DATE
6	REVISION NO.6	MM	MS	02/08
5	REVISION NO.5	MM	MS	11/07
4	REVISION NO.4	MM	MS	09/07
3	REVISION NO.3	MM	MS	07/07

HERRERA ENVIRONMENTAL CONSULTANTS
2200 Sixth Avenue
Suite 1100
Seattle, Washington
98121-1820
206-441-9080
206-441-9108 FAX

DESIGNED: M. MERKELBACH
DRAWN: J. SCHMIDT
DESIGNED:
DRAWN:
DESIGNED:
CHECKED:
DESIGNED:
APPROVED: M. SPILLANE

SKAGIT ENVIRONMENTAL BANK

UPDATED HEC-RAS CROSS-SECTION LOCATIONS

DATE: FEBRUARY 2008
PROJECT NO: 04-02822-003
DRAWING NO: R-5
SHEET NO: 43 of 46

03-05-08/rtb/HEC-R04-02822-003-00-001

6 Open ditch upstream of culvert

5 24-inch culvert on upstream end of crossing

1 Confluence of drainage to Nookachamps Creek

2 Facing east downstream of culvert

3 Crossing over ditch culvert

4 Downstream culvert is covered with rip-rap that is sloughing down slopes

No.	REVISION	BY	APP'D	DATE
3	REVISION NO. 6	MM	MS	02/08
2	REVISION NO. 5	MM	MS	09/07
1	REVISION NO. 4	MM	MS	07/07

HERRERA ENVIRONMENTAL CONSULTANTS
2200 Sixth Avenue
Suite 1100
Seattle, Washington
98121-1820
206-441-9080
206-441-9108
http://www.herrerainc.com

DESIGNED: M. MERKELBACH
DRAWN: R. BOLTON
DESIGNED:
DRAWN:
DESIGNED:
CHECKED:
DESIGNED:
APPROVED: M. SPILLANE

SKAGIT ENVIRONMENTAL BANK

WETLAND 1 DRAINAGE DIAGRAM

DATE: FEBRUARY 2008
PROJECT NO: 04-02822-003
DRAWING NO: R-6
SHEET NO: 44 OF 46

03-05-08/rb/HEC-R04-02822-003-00-001

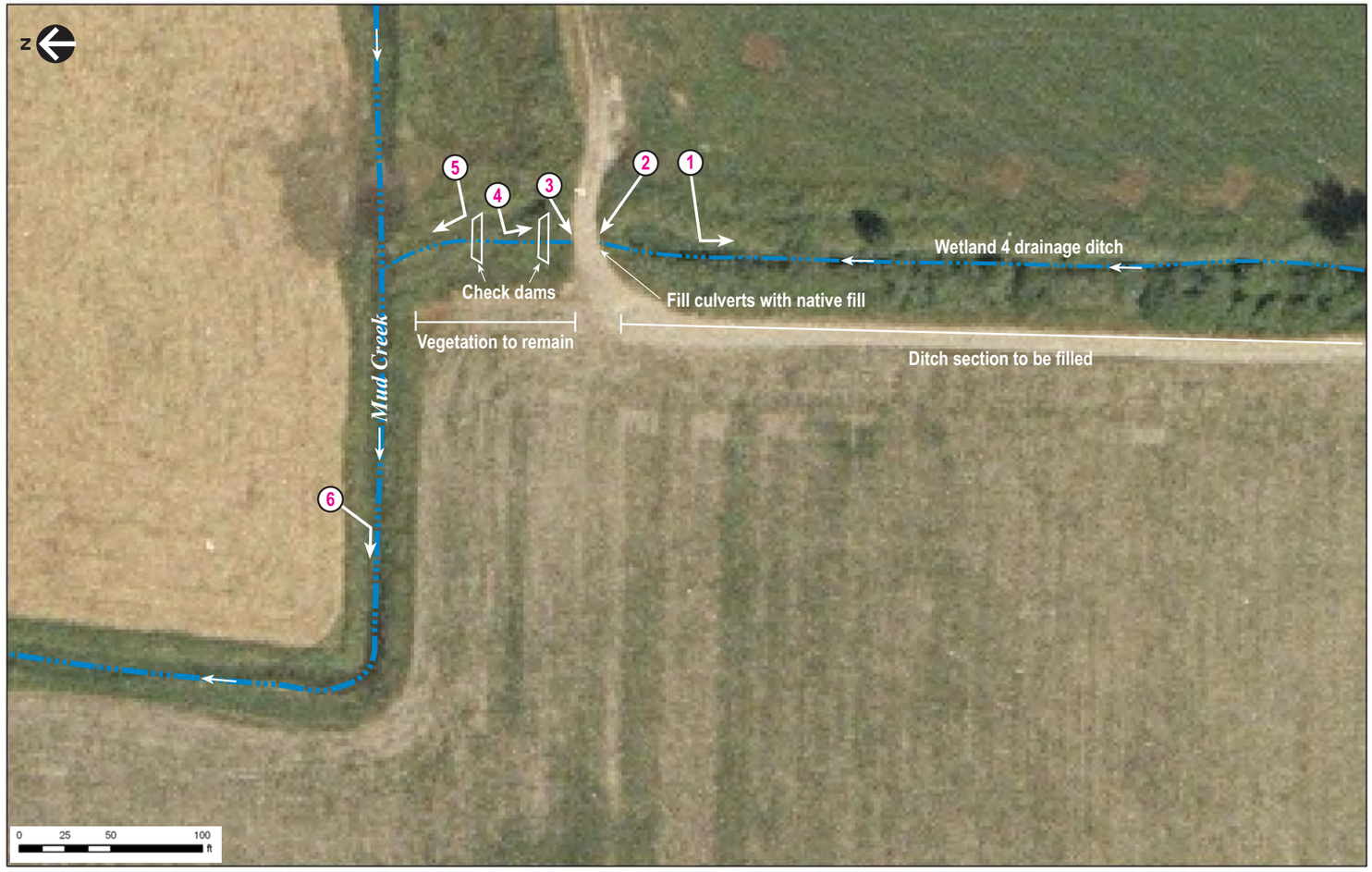

6 Downstream end of Mud Creek flowing towards Nookachamps Creek

5 Confluence of drainage to Mud Creek

1 Facing south up the Wetland 4 drainage

2 Upstream end of culverts

3 Two 48-inch corrugated metal culverts on downstream end

4 Downstream end of culverts

No.	REVISION	BY	APP'D	DATE
3	REVISION NO. 6	MM	MS	02/08
2	REVISION NO. 5	MM	MS	09/07
1	REVISION NO. 4	MM	MS	07/07

HERRERA ENVIRONMENTAL CONSULTANTS
2200 Sixth Avenue
Suite 1100
Seattle, Washington
98121-1820
206-441-9080
206-441-9108
http://www.herrerainc.com

DESIGNED: M. MERKELBACH
DRAWN: R. BOLTON
DESIGNED:
DRAWN:
DESIGNED:
CHECKED:
DESIGNED:
APPROVED: M. SPILLANE

SKAGIT ENVIRONMENTAL BANK

WETLAND 4 DRAINAGE DIAGRAM

DATE: FEBRUARY 2008
PROJECT NO: 04-02822-003
DRAWING NO: R-7
SHEET NO: 45 OF 46

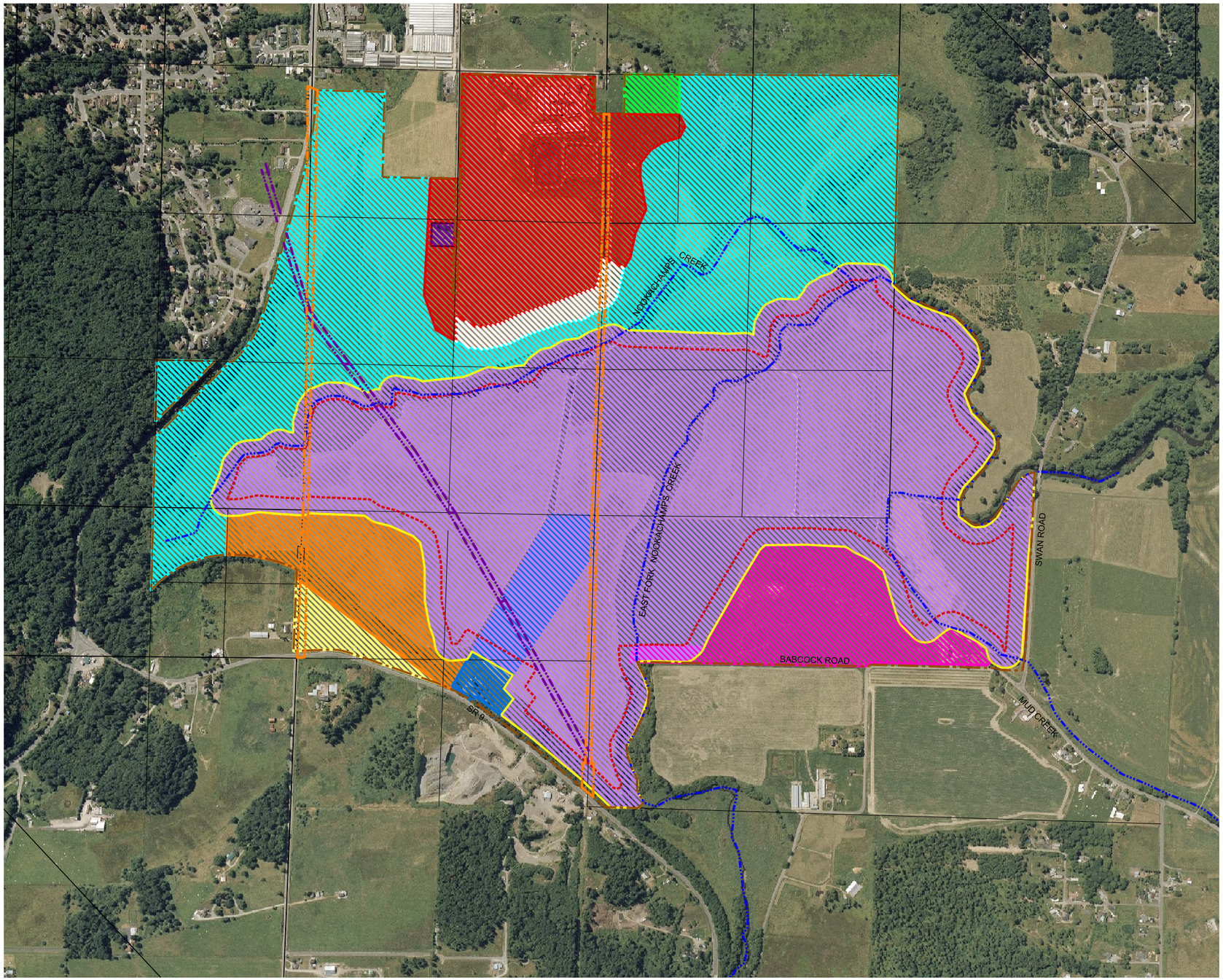

500 0 500 1000
SCALE IN FEET

LEGEND:

- STREAM
- PARCEL BOUNDARY
- WATER LINE EASEMENT
- POWER LINE EASEMENT
- ORIGINAL CLEAR VALLEY FARM PROPERTY BOUNDARY
- EDGE OF BUFFER
- MITIGATION BANK BOUNDARY
- KORTHUIS PROPERTY* (4.2 ACRES) [AG-NRL]
- KNOLL PROPERTY* (82.8 ACRES) [AG-NRL]
- KNOLL APRON PROPERTY* (8.0 ACRES) [AG-NRL]
- MIDDLE HOUSE PROPERTY* (1.0 ACRES) [AG-NRL]
- RED BARN PROPERTY (42.7 ACRES) [AG-NRL]
- 33 ACRE PROPERTY (33.1 ACRES) [AG-NRL]
- RAILROAD HOUSE PROPERTY* (8.6 ACRES) [RRV]
- BLUE HOUSE PROPERTY* (20.2 ACRES) [AG-NRL]
- POSSIBLE SKAGIT LAND TRUST PROPERTY (222.0 ACRES) [AG-NRL, AREA SOUTH OF SR538 ZONED AS MOUNT VERNON CITY LIMITS]
- SKAGIT ENVIRONMENTAL BANK (396.0 ACRES) [AG-NRL]

* PROPERTIES HAVE BEEN SOLD AND ARE NO LONGER OWNED BY CLEAR VALLEY ENVIRONMENTAL, INC.

NOTE:

- ZONING FOR EACH PROPERTY IS PROVIDED IN BRACKETS [AG-NRL=AGRICULTURAL, RRV=RURAL RESERVE]

ONE INCH
AT FULL SIZE, IF NOT ONE INCH SCALE ACCORDINGLY

© 2007 Herrera Environmental Inc. All rights reserved.

No.	REVISION	BY	APP'D	DATE
5	REVISION NO. 5	MRM	MS	12/07
4	REVISION NO. 4	MRM	MS	9/07
3	REVISION NO. 3	MRM	MS	8/07

HERRERA ENVIRONMENTAL CONSULTANTS
2200 Sixth Avenue
Suite 1100
Seattle, Washington
98121-1820
206-441-9080
206-441-9108 FAX
http://www.herreralnc.com

DESIGNED: M. MERKELBACH
DRAWN: L. TURNIDGE
DESIGNED: -
DRAWN: -
DESIGNED: -
CHECKED: -
SCALE: AS NOTED
APPROVED: M. SPILLANE

SKAGIT ENVIRONMENTAL BANK

PURCHASED, SOLD, AND INTENDED FUTURE USES OF THE SKAGIT ENVIRONMENTAL BANK AND SURROUNDING PROPERTIES

DATE: FEBRUARY 2008
PROJECT NO: 04-02822-003
DRAWING NO: R-8
SHEET NO: 46 OF 46

Path: O:\proj\04-02822-003\Cad\Dwgs\Phase 1-2-3 Rev 6\R-8.dwg
Plot Date: 3/5/2008 4:08 PM Cad User: Laura Turnidge
Plot Style Table: Herrera-Color.ctb Plotter: Adobe PDF